TG1810_1822AL(e-e).book Page 1 Tuesday, March 1, 2005 6:46 PM

Panasonic

KX-TG1810

SMS

Operating Instructions

Digital Cordless Phone

Model No. **KX-TG1810AL**

Digital Cordless Answering System

Model No. **KX-TG1822AL**

This unit is compatible with Caller ID and SMS. To use these features, you must subscribe to the appropriate service of your service provider.

Charge the batteries for about 7 hours before initial use.

Please read these operating instructions before using the unit and save them for future reference.

TG1810_1822AL(e-e).book Page 2 Tuesday, March 1, 2005 6:46 PM

Introduction

Thank you for purchasing a new Panasonic digital cordless phone.

For your future reference
Attach or keep original receipt to assist with any repair under warranty.

Serial No. (found on the bottom of the base unit)
Date of purchase
Name and address of dealer

Note:

- In the event of problems, you should contact your equipment supplier in the first instance.

Trademarks:

- Eatoni and LetterWise are trademarks of Eatoni Ergonomics, Inc.

TG1810_1822AL(e-e).book Page 3 Tuesday, March 1, 2005 6:46 PM

Feature highlights

Phonebooks
This unit provides the handset phonebook (200 names and phone numbers; page 21) and the shared phonebook (20 names and phone numbers: KX-TG1822 only; page 24). These phonebooks allow you to make calls without having to dial manually. For handset phonebook, you can assign each handset phonebook entry to the desired category, and search for handset phonebook entries by name or category.

Handset phonebook category
If you subscribe to Caller ID service, handset phonebook categories (page 21) can help you identify who is calling by using different ringtones for different categories of callers (page 38).

Audible call for shared phonebook (KX-TG1822 only)
Audible call allows you to know who is calling without looking at the display. If you record an audible call announcement for a shared phonebook entry (page 24), the audible call recording will be announced when you receive a call from that person.
Audible call is available only after subscribing to Caller ID service (page 39).

Night mode
Night mode allows you to select a block of time during which the handset/base unit will not ring, useful if you do not want to be disturbed, for example, while sleeping.
Night mode can be set independently for the handset (page 29) and base unit (page 34).

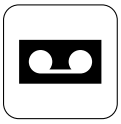

Digital answering system (KX-TG1822 only)
Digital answering system allows the unit to answer and record calls for you when you are unavailable to answer the phone (page 49).

SMS (Short Message Service)
SMS allows you to send and receive text messages between other fixed-line and mobile phones that support compatible SMS networks and features. SMS features are available only after subscribing to Caller ID and/or appropriate service (page 41).

Feature highlights

Polyphonic ringtones for handset
You can change the ringtone heard when the handset rings for outside calls and intercom calls. You can choose from 5 ringtones and 10 melody tones (page 28).

TG1810_1822AL(e-e).book Page 5 Tuesday, March 1, 2005 6:46 PM

Preparation

Accessory information 6
Important information 7
Instructions to customer 9
Controls and displays 11
Connections 13
Battery installation 14
Battery charge 14
Battery replacement 15
Turning the power on/off. 15
Setting the date and time 15

Making/Answering Calls

Making calls 17
Answering calls 19

Phonebooks

Handset phonebook 21
Shared phonebook (KX-TG1822 only) . .24
Copying phonebook entries 26

Handset Settings

Guide to handset settings. 27
Time settings 28
Ringer setup 28
Night mode 29
Display setup 30
Call options. 31
Other options 31

Base Unit Settings

Guide to base unit settings. 33
Ringer setup 34
Call options. 35
Other options 36

Caller ID Service

Using Caller ID service. 38
Caller list. 39
Voice mail service. 40

SMS (Short Message Service)

Using SMS (Short Message Service). . .41
Turning SMS on/off 41
Changing SMS message centre numbers 41
Sending a message 42
Receiving a message. 43
Guide to SMS settings 45
Available character entries for SMS. . . .47

Answering System Features (KX-TG1822 only)

Answering system 49
Turning the answering system on/off . . .49
Greeting message 49
Listening to messages 50
Recording a voice memo 51
Memory capacity 51
Using direct commands 52
Remote operation. 52
Guide to answering system settings . . .54

Multi-unit Operation

Operating additional units 56
Registering a handset to a base unit . . .56
Intercom between handsets. 58
Transferring calls between handsets, conference calls 59

Useful Information

Wall mounting 60
Available character entries. 62
Troubleshooting 65
Specifications 70

Index

Index 71

TG1810_1822AL(e-e).book Page 6 Tuesday, March 1, 2005 6:46 PM

Accessory information

Included accessories

AC adaptor (for base unit) PQLV19AL 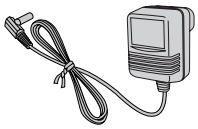	Telephone line cord 	Telephone plug 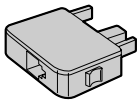
Rechargeable batteries –KX-TG1810.....2 –KX-TG1822.....4 (AAA size) HHR-4EPT 	Handset cover –KX-TG1810.....1 –KX-TG1822.....2 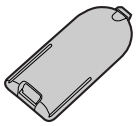	Handset –KX-TG1810.....1 –KX-TG1822.....2
Charger (KX-TG1822 only) PQLV30032 AC adaptor (for charger: KX-TG1822 only) PQLV200AL 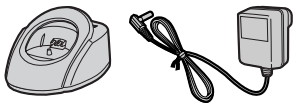	Operating instructions 	Quick guide

Additional/replacement accessories

Model No.	Description
HHR-4EPT	2 rechargeable nickel metal hydride (Ni-MH) batteries
KX-TGA121AZ	Additional Digital Cordless Handset
KX-A272	DECT repeater

TG1810_1822AL(e-e).book Page 7 Tuesday, March 1, 2005 6:46 PM

Important information

General

- Use only the AC adaptor included with this product, noted on page 6.
- Do not connect the AC adaptor to any AC outlet other than a standard 220–240 V AC outlet.
- This product is unable to make calls when:
  - The portable handset battery(ies) need recharging or have failed.
  - There is a power failure.
  - The key lock feature is turned on.
  - The call bar feature is turned on (only phone numbers stored in the unit as emergency numbers can be called).
- Do not open the base unit or handset other than to replace the battery(ies).
- This product should not be used near emergency/intensive care medical equipment and should not be used by people with pacemakers.
- Care should be taken that objects do not fall onto, and liquids are not spilled into, the unit. Do not subject this product to excessive smoke, dust, mechanical vibration or shock.

Environment

- Do not use this product near water.
- This product should be kept away from heat sources such as radiators, cookers, etc. It should also not be placed in rooms where the temperature is less than 5 °C or greater than 40 °C.
- It is advised not to use the equipment at a refuelling point. Users are reminded to observe restrictions on the use of radio equipment in fuel depots, chemical plants or where blasting operations are in progress.
- The AC adaptor is used as the main disconnect device. Ensure that the AC outlet is installed near the unit and is easily accessible.

Warning:

- To prevent the risk of electrical shock, do not expose this product to rain or any other type of moisture.
- The cordless handset earpiece is magnetised and may retain small metallic objects.

Location

- For maximum distance and noise-free operation, place your base unit:
  - Away from electrical appliances such as TVs, radios, personal computers or other phones.
  - In a convenient, high and central location.

Battery caution

- We recommend using the battery(ies) noted on page 6. **Use only rechargeable battery(ies).**
- Do not mix old and new batteries.
- Do not dispose of the battery(ies) in a fire, as they may explode. Check local waste management codes for special disposal instructions.
- Do not open or mutilate the battery(ies). Released electrolyte from the battery(ies) is corrosive and may cause burns or injury to the eyes or skin. The electrolyte may be toxic if swallowed.
- Exercise care when handling the battery(ies). Do not allow conductive materials such as rings, bracelets or keys to touch the battery(ies), otherwise a short circuit may cause the battery(ies) and/or the conductive material to overheat and cause burns.
- Charge the battery(ies) in accordance with the information provided in these operating instructions.
- Only use the included base unit (or charger) to charge the battery(ies). Do not

TG1810_1822AL(e-e).book Page 8 Tuesday, March 1, 2005 6:46 PM

tamper with the base unit (or charger). Failure to follow these instructions may cause the battery(ies) to swell or explode.

TG1810_1822AL(e-e).book Page 9 Tuesday, March 1, 2005 6:46 PM

Instructions to customer

Installation

Attached to this telephone is an approval label. This label is evidence that it is a “Permitted Attachment” which has been authorised to be connected to your telephone service. Conditions relating to connection and operation of this Permitted Attachment are contained in Telecommunications General By-Law 220 (5).

You are authorised to install this Permitted Attachment yourself by plugging it into the line socket of any regular telephone. You may connect it in place of your existing telephone or to any spare telephone socket installed in your premises.

To disconnect your existing telephone you must first remove its plug from the line socket. You can then insert the plug of your Permitted Attachment into the socket and use your equipment.

If the plug of your existing telephone cannot be readily removed, you will have to remove the screw securing it. To do this proceed as follows:

1 Loosen screw “A” sufficiently to remove the socket cover. (See Fig. 1.)

2 Remove screw “B” and withdraw the plug. (See Fig. 2.)

3 Replace screw “B”. (See Fig. 3.) Ensure that it screws completely into the socket recess. (If the screw is too long, increase the hole depth or replace the screw with one 5 mm shorter.)

4 Replace socket cover and tighten screw “A”. (See Fig. 4.)

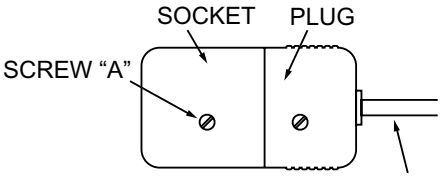

Fig. 1

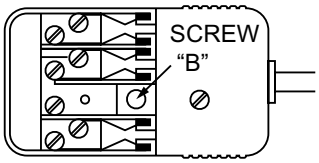

Fig. 2

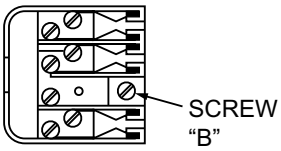

Fig. 3

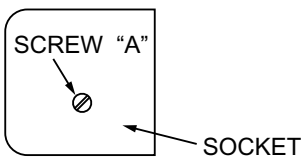

Fig. 4

Preparation

If you are satisfied with the operation of your telephone service after plugging in your Permitted Attachment, your installation is completed.

You will be unable to connect this Permitted Attachment if your telephone service consists only of a wall phone or an old style telephone which is not connected by means of a modern plug and socket. In such cases a new socket will need to be installed.

Should the Permitted Attachment not operate when plugged into a socket, it is either faulty or unsuitable for operation with your telephone service. It should be returned to the store where purchased or to an Authorised Service Centre.

Service difficulties
If at any time a fault occurs on your telephone service carry out the following checks before you call for service:

- Disconnect the Permitted Attachment and try using the service with the normal telephone.
- If the telephone service then operates satisfactorily, the fault is in your Permitted Attachment. Leave the Permitted Attachment disconnected and report the fault to its supplier or agent to arrange for repair.
- If when using the telephone the service is still faulty, report the fault to “Service Difficulties and Faults” for attention.

You are required to keep this Permitted Attachment in good working order while it is connected to your telephone service. Its construction or internal circuit must not be modified in any way without permission.

Warning:
This cordless telephone system does not incorporate provision for secrecy of conversations. Appropriately tuned radio equipment and other cordless telephone systems in close proximity may be used by a third party to monitor and possibly interrupt conversations in progress when this system is on radio operation.

TG1810_1822AL(e-e).book Page 11 Tuesday, March 1, 2005 6:46 PM

Controls and displays

Controls

Handset

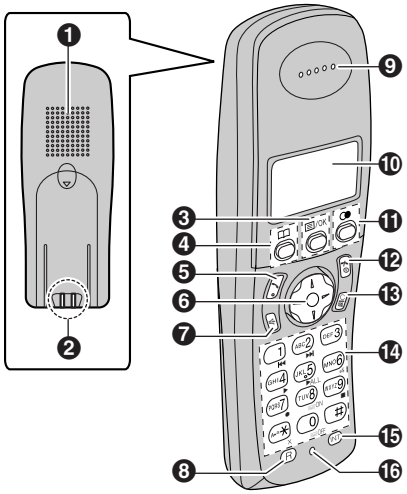

*The pictured model is KX-TG1822.

❶ Speaker
❷ Charge contact
❸【▤/OK】(Menu/OK)
❹【🕮】(Phonebook)
❺【↷】(Talk)
❻ Navigator key
- **【▲】【▼】**: To search for the desired item in menus.
- **【▶】**: To select the desired item or move the cursor to the right.
- **【◀】**: To return to the previous screen or move the cursor to the left.

❼【🔊】(Speakerphone)
❽【R】(Recall)
❾ Receiver
❿ Display
⓫【↻】(Redial/Pause)
⓬【⏻】(Off/Power)
⓭【C/⊠】(Clear/Mute)
⓮ Dial keypad
- The icons printed below the dial keys shown in the illustration (▶, 🔊, ■ etc.) are found on the KX-TG1822 only. These icons indicate answering system operations.

⓯【INT】(Intercom)
⓰ Microphone

Note:
- Up to 3 menu items can be displayed at a time. To select a menu item not shown on the current page, scroll up or down by pressing the navigator key, **【▲】** or **【▼】**, respectively.

Base unit

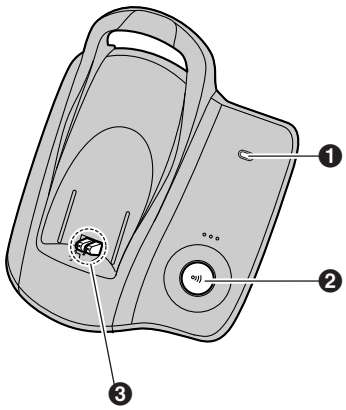

*The pictured model is KX-TG1822.

❶ Answer on indicator (KX-TG1822 only)
❷【•))】(Page)
❸ Charge contact

TG1810_1822AL(e-e).book Page 12 Tuesday, March 1, 2005 6:46 PM

Charger (KX-TG1822 only)

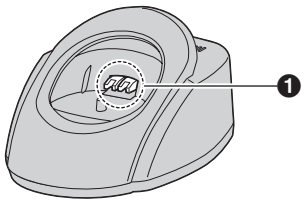

❶ **Charge contact**

Displays

Display icons

Various icons appear on the handset display to indicate the current status of the unit.

Display icon	Meaning
	Within range of a base unit ● When flashing: Handset is searching for base unit. (out of range of base unit, handset is not registered to base unit, no power on base unit)
	Handset is accessing base unit. (intercom, paging, changing base unit settings, etc.)
	Handset is on an outside call.
	Call bar is on. (page 31)
	Answering system is on. (KX-TG1822 only; page 49)
	Battery strength
[VE]	Voice enhancer is set to high or low tone. (page 18)
[N]	Night mode is on. (page 29)
[X]	Key lock is on. (page 18)
[2]	Handset number: The left icon shows handset 2 example. (page 30)
-2-	Base unit number: The left icon shows base unit 2 example. (page 30)
	New SMS message received (SMS users only; page 44)
[IN USE]	Line is being used by another handset.

TG1810_1822AL(e-e).book Page 13 Tuesday, March 1, 2005 6:46 PM

Connections

When the AC adaptor is connected, a short beep will be heard. If it is not heard, check the connections.

Base unit

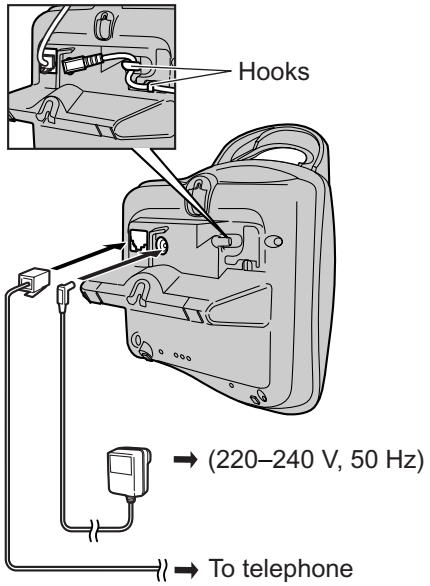

Charger (KX-TG1822 only)

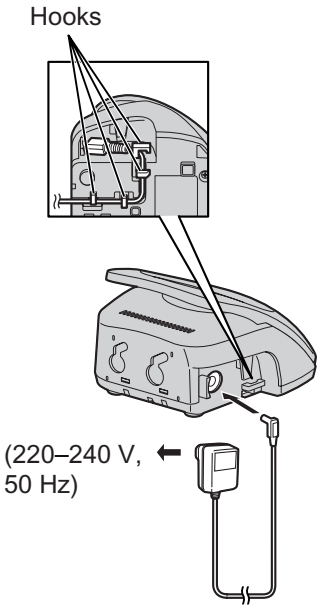

Important:

- Use only the AC adaptor and telephone line cord supplied with this unit.

Note:

- After connection, you must charge the batteries to make or answer calls (page 14).
- Never install telephone wiring during a lightning storm.
- The AC adaptor must remain connected at all times. (It is normal for the adaptor to feel warm during use.)
- The AC adaptor should be connected to a vertically oriented or floor-mounted AC outlet. Do not connect the AC adaptor to a ceiling-mounted AC outlet, as the weight of the adaptor may cause it to become disconnected.
- This unit is not designed to be used with rotary (pulse dialling) services.

TG1810_1822AL(e-e).book Page 14 Tuesday, March 1, 2005 6:46 PM

Battery installation

1 Insert the batteries negative (⊖) terminal first.

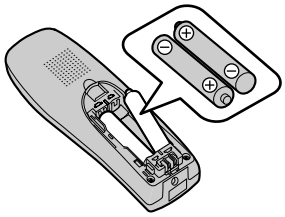

2 Close the handset cover.

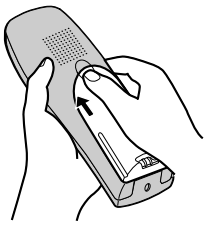

Note:

- Use only rechargeable batteries (page 6).

Battery charge

Place the handset on the base unit for about 7 hours before initial use.
When charging, the battery icon is shown as follows.

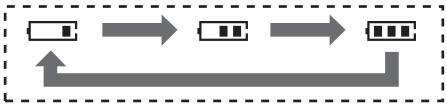

When the batteries are fully charged, [▮▮▮] remains on the display.

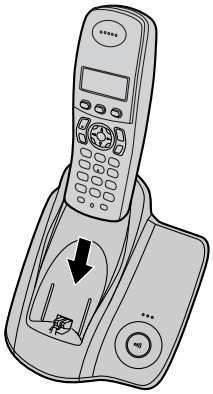

*The pictured model is KX-TG1810.

Note:

- It is normal for the handset to feel warm during charging.
- It takes 7 hours to fully charge the batteries, however, you can use the handset before the batteries are fully charged.
- Clean the charge contacts (page 11) of the handset and base unit with a soft, dry cloth once a month, otherwise the batteries may not charge properly. Clean more often if the unit is exposed to grease, dust or high humidity.

TG1810_1822AL(e-e).book Page 15 Tuesday, March 1, 2005 6:46 PM

Battery strength

Battery icon	Battery strength
	High
	Medium
	Low When flashing: Needs to be charged.

Note:

- When flashes, recharge the handset batteries. will continue to flash until the batteries have been charged for at least 15 minutes.
- If the handset is turned off, it will be turned on automatically when it is placed on the base unit.

Battery life

After your Panasonic batteries are fully charged, you can expect approximately the following performance:

Ni-MH batteries (700 mAh)

Operation	Operating time
While in use (talking)	20 hours max.
While not in use (standby)	170 hours max.

Note:

- Actual battery performance depends on a combination of how often the handset is in use (talking) and how often it is not in use (standby).
- Battery operating time may be shortened over time depending on usage conditions and ambient temperature.

Battery replacement

If flashes even after the handset batteries have been charged for 7 hours, the batteries must be replaced.

Important:

- We recommend the use of Panasonic rechargeable batteries noted on page 6. If you install non-rechargeable batteries and start charging, the batteries may leak electrolyte.
- Do not mix old and new batteries.

1 Press the notch on the handset cover firmly and slide it in the direction of the arrow.

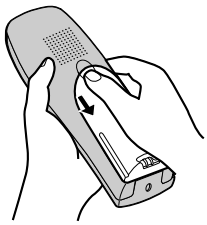

2 Remove the old batteries positive (⊕) terminal first and install the new ones. See page 14 for battery installation.

Turning the power on/off

Power on

Press 【 】 for about 1 second.

- The display will change to the standby mode.

Power off

Press 【 】 for about 2 seconds.

- The display will go blank.

Setting the date and time

Important:

- Confirm that the AC adaptor is connected.
- Ensure that is not flashing.

1 Press 【/OK】.

TG1810_1822AL(e-e).book Page 16 Tuesday, March 1, 2005 6:46 PM

2 Select **"Handset Setup"**, then press 【▶】.

3 Select **"Time Settings"**, then press 【▶】.

4 Select **"Set Date & Time"**, then press 【▶】.

5 Enter the current day, month and year by selecting 2 digits for each.
Example: 17 May, 2005
Press **【1】【7】【0】【5】【0】【5】**.

6 Enter the current hour and minute by selecting 2 digits for each.

- You can select **"AM"**, **"PM"** or 24-hour time entry by pressing 【✳】 repeatedly.

Example: 3:30 PM
Press **【0】【3】【3】【0】**, then press 【✳】 repeatedly until **"03:30 PM"** is displayed.

7 Press **【☰/OK】**.

8 Press 【⏻】.

Note:

- To correct a digit, press 【◀】 or 【▶】 to move the cursor, then make the correction.
- The date and time may be incorrect after a power failure. In this case, set the date and time again.

TG1810_1822AL(e-e).book Page 17 Tuesday, March 1, 2005 6:46 PM

Making calls

1 Lift the handset and dial the phone number.
- To correct a digit, press 【C/⊠】, then enter the correct number.

2 Press 【↖】.

3 When finished talking, press 【✈⏻】 or place the handset on the base unit.

Speakerphone

The handset features a digital speakerphone, which allows you to have hands-free conversations.

1 During a conversation, press 【🔈】 to turn on the speakerphone.
- Speak alternately with the caller.

2 When finished talking, press 【✈⏻】 or place the handset on the base unit.

Note:
- For best performance, please note the following:
  – Use the speakerphone in a quiet environment.
  – If you or the other party have difficulty hearing each other, press 【▲】 or 【▼】 repeatedly to adjust the speaker volume as necessary.
- To switch back to the receiver, press 【↖】.

To adjust the receiver or speaker volume

Press 【▲】 or 【▼】 while talking. 4 volume levels are available for the receiver. 6 levels are available for the speaker.

Redial feature

Previously dialled phone numbers (each 24 digits max.) can be redialled.

To redial the last number dialled

Press 【○●】, then press 【↖】 or 【🔈】.
- If 【🔈】 is pressed, the unit will redial automatically if the other party's line is engaged.

Note:
- You can also press 【↖】 or 【🔈】 before pressing 【○●】.

To make a call using the redial list

The last 10 phone numbers dialled are stored in the redial list.

1 Press 【○●】.
- The last number dialled will be displayed.

2 Press 【▲】 or 【▼】 repeatedly to select the desired number.
- To exit the list, press 【✈⏻】.

3 Press 【↖】 or 【🔈】.
- If 【🔈】 is pressed, the unit will redial automatically if the other party's line is engaged.

To redial automatically

If you press 【🔈】 when redialling and the other party's line is engaged, the unit will redial the phone number again automatically. The unit will redial up to 9 times. While the handset is waiting to redial, 【🔈】 will flash. While the handset is redialling, mute is automatically turned on.

Note:
- Automatic redial is cancelled when any button (except 【○●】) is pressed.
- If mute does not turn off after the line is connected, press 【C/⊠】.

To edit a number in the redial list before calling it

1 Press 【○●】.

2 Press 【▲】 or 【▼】 repeatedly to select the desired number, then press 【☰/OK】.

3 Select "`Edit and Call`", then press 【▶】.

TG1810_1822AL(e-e).book Page 18 Tuesday, March 1, 2005 6:46 PM

4 Press 【◀】 or 【▶】 to move the cursor, then edit the number.
- Place the cursor on the number you wish to erase, then press 【C/⊠】.
- Place the cursor to the right of where you want to insert a number, then press the appropriate dial key.

5 Press 【📞】 or 【🔊】.

To erase numbers in the redial list

1 Press 【○●】.

2 Press 【▲】 or 【▼】 repeatedly to select the desired number, then press 【☰/OK】.

3 Select "**Erase**", then press 【▶】.
- If you want to erase all numbers in the list, select "**Erase All**", then press 【▶】.

4 Select "**Yes**", then press 【▶】.

5 Press 【⏻】.

To store a number from the redial list into the handset phonebook

1 Press 【○●】.

2 Press 【▲】 or 【▼】 repeatedly to select the desired number, then press 【☰/OK】.

3 Select "**Add Phonebook**", then press 【▶】.

4 Enter a name (16 characters max.; see page 62 for character entry), then press 【☰/OK】.

5 Edit the phone number if necessary, then press 【☰/OK】.

6 Select the desired category (page 21), then press 【▶】.

7 Select "**Save**", then press 【▶】.

8 Press 【⏻】.

Other features

Voice enhancer

You can change the tone quality of the receiver while you are on a call. 3 settings are available.

1 Press 【☰/OK】 during a call.
- For KX-TG1822 users, select "**Voice Enhancer**", then press 【▶】.

2 Select the desired setting, then press 【▶】.

Note:
- If you select "**High Tone**" or "**Low Tone**", "**[VE]**" is displayed.

Mute

You can mute your voice during a conversation. While mute is turned on, you will be able to hear the other party, but the other party will not be able to hear you.

1 To mute your voice, press 【C/⊠】.

2 To return to the conversation, press 【C/⊠】 again.

Key lock

The handset can be locked so that no calls or settings can be made. Incoming calls can be answered, but all other functions are disabled while key lock is on.

To turn key lock on, press 【☰/OK】 for about 2 seconds.
- "**[X]**" is displayed.
- To turn key lock off, press 【☰/OK】 for about 2 seconds.

Note:
- Calls to emergency numbers (page 35) cannot be made until key lock is turned off.
- Key lock is turned off when the handset is turned off.

TG1810_1822AL(e-e).book Page 19 Tuesday, March 1, 2005 6:46 PM

R button (to use the recall feature)

【R】 is used to access optional telephone services. Contact your service provider for details.

Note:

- If your unit is connected to a PBX (private branch exchange), pressing 【R】 can allow you to access certain features of your host PBX such as transferring an extension call. Consult your PBX dealer for details.
- You can change the recall time (page 35).
- Users in Australia can access Telstra's "EASY CALL" service by having the recall time set at 100 msec. (default setting, see page 33), and then follow Telstra's "EASY CALL" instructions to operate this service.

Pause button (for PBX/long distance service users)

A pause is sometimes required when making calls using a PBX or long distance service.

Example: If you have to dial 【0】 before dialling outside numbers manually, you will probably pause after dialling 【0】 until you hear a dial tone.

1. Press 【0】.
2. Press 【C●】.
3. Dial the phone number, then press 【📞】 or 【🔊】.

Note:

- Pressing 【C●】 1 time creates 1 pause. Press 【C●】 repeatedly to create longer pauses. To change pause length, see page 35.

Recording a telephone conversation (KX-TG1822 only)

You can record your conversation while on an outside call.

Important:

- Before recording a conversation, you should inform the other party that the conversation will be recorded.

1. Press 【▤/OK】 during a conversation.
2. Select **"Record Call"**, then press 【▶】.
   - A beep is heard and recording starts.
   - A beep sounds every 15 seconds and can be heard by the other party, but is not recorded.
3. To stop recording, press 【▤/OK】.

Note:

- Recorded conversations are treated as new messages.
- To listen to the recorded conversation, see page 50.
- If message memory becomes full, **"Memory Full"** is displayed and recording stops. Erase unnecessary messages (page 50).
- While recording a conversation, you cannot change the tone quality of the handset.

Answering calls

1. Lift the handset and press 【📞】 or 【🔊】 when the unit rings.
   - You can also answer a call by pressing any dial key from 【0】 to 【9】, 【✱】, 【#】, or 【INT】. **(Any key answer feature)**
2. When finished talking, press 【📞⏻】 or place the handset on the base unit.

Auto talk feature

You can answer calls simply by lifting the handset off the base unit. You do not need to press 【📞】. To turn this feature on, see page 31.

To adjust the ringer volume when an outside call comes in

Press 【▲】 or 【▼】 when an outside call comes in.

TG1810_1822AL(e-e).book Page 20 Tuesday, March 1, 2005 6:46 PM

Note:

- The ringer volume cannot be adjusted if the handset is on the base unit.

Other features

Handset locator

Using this feature, you can locate the handset if it has been misplaced.

1 Press 【•))】 on the base unit.

- The base unit will page the handset for about 1 minute.

2 To stop paging, press 【•))】 on the base unit or press 【✂⏻】 on the handset.

TG1810_1822AL(e-e).book Page 21 Tuesday, March 1, 2005 6:46 PM

Handset phonebook

The handset phonebook allows you to make calls without having to dial manually. You can add 200 names and phone numbers to the handset phonebook, assign each handset phonebook entry to the desired category, and search for handset phonebook entries by name or category.

Adding entries to the handset phonebook

1 Press 【📖】, then press 【☰/OK】.
2 Select **"New Entry"**, then press 【▶】.
3 Enter the party's name (16 characters max.; see page 62 for character entry), then press 【☰/OK】.
4 Enter the party's phone number (24 digits max.), then press 【☰/OK】.
5 Select the desired category for the entry, then press 【▶】.
6 Select **"Save"**, then press 【▶】.
7 Press 【⏻】.

Note:

- If there is no space to store new entries, **"Memory Full"** will be displayed. Erase unnecessary entries (page 22).

To edit/correct a mistake

Press 【◀】 or 【▶】 to place the cursor on the number or character you wish to erase, then press 【C/⌫】. Place the cursor to the right of where you want to insert a number or character, then press the appropriate dial key.

Note:

- Press and hold 【C/⌫】 to erase all numbers or characters.

Categories

Categories can help you find entries in the handset phonebook quickly and easily. When adding an entry to the handset phonebook you can assign it to the desired category. You can change the names of categories assigned for handset phonebook entries ("Friends", "Family", etc.) and then search for handset phonebook entries by category. Additional category features are available for Caller ID subscribers (page 38).

Changing category names

1 Press 【📖】, then press 【☰/OK】.
2 Select **"Category"**, then press 【▶】.
3 Select the category you want to change the name of, then press 【▶】.
4 Select **"Category Name"**, then press 【▶】.
5 Edit the name (10 characters max.; see page 62 for character entry), then press 【☰/OK】.
6 Press 【⏻】.

Finding and calling a handset phonebook entry

Handset phonebook entries can be searched for by first character, by category, or by scrolling through all handset phonebook entries.
Once you have found the desired entry, press 【📞】 or 【🔊】 to dial the phone number.

Scrolling through all entries

1 Press 【📖】.
2 Press 【▲】 or 【▼】 repeatedly to display the desired entry.

Searching by first character (index search)

1 Press 【📖】, then press 【○】.

TG1810_1822AL(e-e).book Page 22 Tuesday, March 1, 2005 6:46 PM

2 Select **"Index Search"**, then press **【▶】**.

3 Select the character entry mode that contains the character you are searching for, and press **【▶】**.

4 Press the dial key (**【0】** to **【9】**) which contains the character you are searching for (page 62).
- Press the same dial key repeatedly to display the first entry corresponding to each letter located on that dial key.
- If there is no entry corresponding to the letter you selected, the next entry will be displayed.

5 Press **【▲】** or **【▼】** repeatedly to scroll through the handset phonebook if necessary.

Searching by category

1 Press **【📖】**, then press **【○●】**.

2 Select **"Category Search"**, then press **【▶】**.

3 Select the category you want to search, then press **【▶】**.
- The first entry in that category is displayed.
- If you select **"All"**, the unit will end the category search.

4 Press **【▲】** or **【▼】** repeatedly to scroll through the handset phonebook if necessary.

Editing entries in the handset phonebook

Handset phonebook entries can be edited after you have saved them. You can change the name, phone number, and category.

Changing a name, phone number, category

1 Find the desired entry (page 21), then press **【☰/OK】**.

2 Select **"Edit"**, then press **【▶】**.

3 Edit the name if necessary (16 characters max.; see page 62 for character entry), then press **【☰/OK】**.

4 Edit the phone number if necessary (24 digits max.), then press **【☰/OK】**.

5 Select the desired category, then press **【▶】**.

6 Select **"Save"**, then press **【▶】**.

7 Press **【✂⏻】**.

Erasing entries from the handset phonebook

Erasing an entry

1 Find the desired entry (page 21), then press **【☰/OK】**.

2 Select **"Erase"**, then press **【▶】**.

3 Select **"Yes"**, then press **【▶】**.

4 Press **【✂⏻】**.

Erasing all entries

1 Press **【📖】**, then press **【☰/OK】**.

2 Select **"Erase All"**, then press **【▶】**.

3 Select **"Yes"**, then press **【▶】**.

4 Select **"Yes"** again, then press **【▶】**.

5 Press **【✂⏻】**.

One touch dial

Assigning an entry in the handset phonebook to a one touch dial key

Dial keys **【1】** to **【9】** can each be used as a one touch dial key, allowing you to dial a number from the handset phonebook by simply pressing a dial key.

1 Find the desired entry (page 21), then press **【☰/OK】**.

2 Select **"One Touch Dial"**, then press **【▶】**.

TG1810_1822AL(e-e).book Page 23 Tuesday, March 1, 2005 6:46 PM

3 Press {▲} or {▼} to select the desired dial key number, then press {▶}.
- When the dial key is already used as a one touch dial key, "✳" is displayed next to the dial key number. If you select this dial key, "**Overwrite**" is displayed. You can overwrite the previous assignment if necessary.
- If you do not wish to overwrite, select "**Go Back**".

4 Select "**Save**", then press {▶}.

5 Press {OFF}.

Making a call using a one touch dial key

1 Press and hold the desired one touch dial key ({**1**} to {**9**}).
- You can view other one touch dial assignments by pressing {▲} or {▼}.

2 Press {TALK} or {SP-PHONE}.

Erasing a one touch dial assignment

1 Press and hold the desired one touch dial key ({**1**} to {**9**}).

2 Press {MENU/OK}, then press {▶}.

3 Select "**Yes**", then press {▶}.

Note:
- Only the one touch dial assignment is erased. The corresponding handset phonebook entry is not erased.

Chain dial

This feature allows you to dial phone numbers in the handset phonebook while you are on a call. This feature can be used, for example, to dial a calling card access number or bank account PIN that you have stored in the handset phonebook, without having to dial manually.

1 While on a call, press {PHONEBOOK}.

2 Press {▲} or {▼} repeatedly to select the desired entry.
- To search by first character (index search), see page 21. To search by category, see page 22.

3 Press {▶} to dial the number.

TG1810_1822AL(e-e).book Page 24 Tuesday, March 1, 2005 6:46 PM

Shared phonebook (KX-TG1822 only)

The shared phonebook allows you to make calls without having to dial manually. Any handset registered to the same base unit can use the shared phonebook. You can add 20 names and phone numbers to the shared phonebook and search for shared phonebook entries by name. If you subscribe to Caller ID service, you can use the shared phonebook's audible call feature (page 39).

Adding entries to the shared phonebook

1 Press 【📖】 2 times.

2 Press 【☰/OK】.

3 Select **"New Entry"**, then press 【▶】.

4 Enter the party's name (16 characters max.; see page 62 for character entry), then press 【☰/OK】.

5 Enter the party's phone number (24 digits max.), then press 【☰/OK】.

6 To record an audible call announcement, select **"Start Recording"**, then press 【▶】, otherwise select **"Skip Recording"**, press 【▶】, then go to step 9.

- Audible call (page 39) is useful for Caller ID subscribers only.
- If **"Memory Full"** is displayed, erase any unnecessary answering system messages (page 50).

7 When **"Recording"** is displayed, speak into the microphone.

- Maximum recording time is 10 seconds.
- Hold the handset about 20 cm away and speak clearly into the microphone.

8 To end recording, select **"Stop"**, then press 【▶】.

- The recording is played back.

9 Select **"Save"**, then press 【▶】.

10 Press 【✂⏻】.

Note:

- **"Error"** is displayed if the recording is less than 1 second long. Repeat step 6.
- If there is no space to store new entries, **"Memory Full"** will be displayed. Erase unnecessary entries (page 25).

To edit/correct a mistake

Press 【◀】 or 【▶】 to place the cursor on the number or character you wish to erase, then press 【C/⌫】. Place the cursor to the right of where you want to insert a number or character, then press the appropriate dial key.

Note:

- Press and hold 【C/⌫】 to erase all numbers or characters.

Finding and calling a shared phonebook entry

Shared phonebook entries can be searched for by first character or by scrolling through all shared phonebook entries.
Once you have found the desired entry, press 【📞】 or 【🔊】 to dial the phone number.

Scrolling through all entries

1 Press 【📖】 2 times.

2 Press 【▲】 or 【▼】 repeatedly to display the desired entry.

Searching by first character (index search)

1 Press 【📖】 2 times.

2 Press 【○●】.

TG1810_1822AL(e-e).book Page 25 Tuesday, March 1, 2005 6:46 PM

3 Select the character entry mode that contains the character you are searching for, and press 【▶】.

4 Press the dial key (【0】 to 【9】) which contains the character you are searching for (page 62).
- Press the same dial key repeatedly to display the first entry corresponding to each letter located on that dial key.
- If there is no entry corresponding to the letter you selected, the next entry will be displayed.

5 Press 【▲】 or 【▼】 repeatedly to scroll through the shared phonebook if necessary.

Editing entries in the shared phonebook

Shared phonebook entries can be edited after you have saved them. You can change the name, phone number, and audible call.

Changing a name, phone number, audible call

1 Find the desired entry (page 24), then press 【☰/OK】.

2 Select "**Edit**", then press 【▶】.

3 Edit the name if necessary (16 characters max.; see page 62 for character entry), then press 【☰/OK】.

4 Edit the phone number if necessary (24 digits max.), then press 【☰/OK】.

5 Skip, record, or erase an audible call recording.
- To record the audible call announcement, continue from step 6, "Adding entries to the shared phonebook", page 24.
- To skip recording, select "**Skip Recording**" and press 【▶】.
- To erase the audible call announcement, select "**Erase**" and press 【▶】.

6 Select "**Save**", then press 【▶】.

7 Press 【⏻】.

Playing back an audible call announcement

1 Find the desired entry (page 24), then press 【☰/OK】.

2 Select "**Audible Call**", then press 【▶】.
- The audible call announcement is played back.

3 Press 【⏻】.

Erasing entries from the shared phonebook

Erasing an entry

1 Find the desired entry (page 24), then press 【☰/OK】.

2 Select "**Erase**", then press 【▶】.

3 Select "**Yes**", then press 【▶】.

4 Press 【⏻】.

Erasing all entries

1 Press 【📖】 2 times.

2 Press 【☰/OK】.

3 Select "**Erase All**", then press 【▶】.

4 Select "**Yes**", then press 【▶】.

5 Select "**Yes**" again, then press 【▶】.

6 Press 【⏻】.

TG1810_1822AL(e-e).book Page 26 Tuesday, March 1, 2005 6:46 PM

Copying phonebook entries

Copying handset phonebook entries to other handset

Handset phonebook entries (page 21) can be copied from the handset to the phonebook of a compatible Panasonic handset.

Copying one entry

1. Find the desired handset phonebook entry (page 21), then press **[▤/OK]**.
2. Select **"Copy"**, then press **[▶]**.
3. Enter the handset number you wish to send the handset phonebook entry to.
4. To continue copying another entry, select **"Yes"**, then press **[▶]**. Find the desired handset phonebook entry, then press **[▶]**.
   - To finish copying, select **"No"**, then press **[▶]**.
5. Press **[✂⏻]**.

Copying all entries

1. Press **[📖]**, then press **[▤/OK]**.
2. Select **"Copy All"**, then press **[▶]**.
3. Enter the handset number you wish to send the handset phonebook entries to.
   - When all entries have been copied, **"Completed"** is displayed.
4. Press **[✂⏻]**.

Note:

- If the other handset (the receiver) is not in standby mode, **"Failed"** is displayed on your handset (the sender).
- If copying failed after copying at least 1 entry, **"Incomplete"** is displayed on your handset (the sender).

Copying handset phonebook entries to the shared phonebook (KX-TG1822 only)

1. Find the desired handset phonebook entry (page 21), then press **[▤/OK]**.
2. Select **"Copy"**, then press **[▶]**.
3. Press **[0]**.
4. To continue copying another entry, select **"Yes"**, then press **[▶]**. Find the desired entry, then press **[▶]**.
   - To finish copying, select **"No"**, then press **[▶]**.
5. Press **[✂⏻]**.

TG1810_1822AL(e-e).book Page 27 Tuesday, March 1, 2005 6:46 PM

Guide to handset settings

For your reference, a chart of all items which can be customised for the handset is printed below.

- When customising the handset, the current item or setting is indicated by ▶.

Handset settings menu	Sub-menu	Sub-menu 2	Default setting	Page
Time Settings	Set Date & Time		—	page 15
	Alarm		Off	page 28
Ringer Setup	Ringer Volume		*Maximum*	page 28
	Ext. Ringtone		Ringtone 1	page 28
	Int. Ringtone		Ringtone 1	page 28
	Night Mode	Start/End	*23:00/06:00*	page 29
		On/Off	Off	page 29
		Ring Delay	60 sec.	page 29
		Select Category	—	page 30
Display Setup	Standby Display		Off	page 30
	Select Language		English	page 30
	Contrast		*Level 3*	page 30
Call Options	Call Bar		Off	page 31
	Auto Talk		Off	page 31
Registration	Register H.set		—	page 57
Select Base	—		Auto	page 57
Other Options	Handset PIN		0000	page 31
	LetterWise		English	page 31
	Keytones		On	page 32
	Reset Handset		—	page 32

Note:

- Up to 3 menu items can be displayed at a time. To select a menu item not shown on the current page, scroll up or down by pressing the navigator key, 【▲】 or 【▼】, respectively.

TG1810_1822AL(e-e).book Page 28 Tuesday, March 1, 2005 6:46 PM

Time settings

Alarm

An alarm will sound for 3 minutes at the set time once or daily. Set the date and time beforehand (page 15).

1 Press **[☰/OK]**.

2 Select **"Handset Setup"**, then press **[▶]**.

3 Select **"Time Settings"**, then press **[▶]**.

4 Select **"Alarm"**, then press **[▶]** 2 times.

5 Select an alarm mode, then press **[▶]**.
- **"Once"**: The alarm will sound once at the set time. Enter the desired day and month by selecting 2 digits for each.
- **"Daily"**: An alarm will sound daily at the set time.
- **"Off"**: Turns the alarm off. Press **[▶]** again, then press **[✆⏻]** to finish.

6 Enter the desired hour and minute by selecting 2 digits for each.
- You can select **"AM"**, **"PM"** or 24-hour time entry by pressing **[✳]** repeatedly.

7 Press **[☰/OK]**.

8 Select the ringtone that will sound at the set time, then press **[▶]**.

9 Select **"Save"**, then press **[▶]**.

10 Press **[✆⏻]**.

Note:
- To stop the alarm, press any dial key.
- When in talk or intercom mode, the alarm will not sound until the call has ended.
- The alarm will sound at the set time even when the ringer volume is turned off.
- If you select **"Once"**, the setting will change to **"Off"** after the alarm sounds.

Ringer setup

Ringer volume

1 Press **[☰/OK]**.

2 Select **"Handset Setup"**, then press **[▶]**.

3 Select **"Ringer Setup"**, then press **[▶]**.

4 Select **"Ringer Volume"**, then press **[▶]**.

5 Press **[▲]** or **[▼]** repeatedly to select the desired volume.

6 Press **[▶]**.

7 Press **[✆⏻]**.

Note:
- Alarms will sound and the handset will ring for intercom calls and when paged even if the ringer is turned off.

Changing ringtones

You can change the ringtone used by the handset.

"Ext. Ringtone": Selects the ringtone for outside calls.

"Int. Ringtone": Selects the ringtone for intercom calls.

1 Press **[☰/OK]**.

2 Select **"Handset Setup"**, then press **[▶]**.

3 Select **"Ringer Setup"**, then press **[▶]**.

4 Select the desired item, then press **[▶]**.

5 Select the desired ringtone, then press **[▶]**.

6 Press **[✆⏻]**.

Note:
- If you select one of the melody ringtones, the ringtone will continue to sound for several seconds if the caller hangs up

TG1810_1822AL(e-e).book Page 29 Tuesday, March 1, 2005 6:46 PM

before you answer. You may hear a dial tone or no one on the line when you answer a call.

- The preset melodies in this product are used with permission of © 2004 M-ZoNE Co., Ltd.

Night mode

Night mode allows you to select a block of time during which the handset will not ring for outside calls. This feature is useful for times when you do not want to be disturbed, for example, while sleeping. Night mode can be set independently for the handset and the base unit (page 34).
Using the handset phonebook's category feature (page 21), you can also select categories of callers whose calls will override night mode and ring the handset (Caller ID subscribers only).
Set the date and time beforehand (page 15).

Note:

- When the call screening feature is on and the base unit answers a call, the greeting message and caller's messages will be heard from the handset speaker even if the night mode setting is on (KX-TG1822 only).

Setting the start and end time for night mode

1. Press **[☰/OK]**.
2. Select **"Handset Setup"**, then press **[▶]**.
3. Select **"Ringer Setup"**, then press **[▶]**.
4. Select **"Night Mode"**, then press **[▶]**.
5. Select **"Start/End"**, then press **[▶]**.
6. Enter the desired hour and minute you wish to start this feature by selecting 2 digits for each.
   - If you use 12-hour time entry, select **"AM"** or **"PM"** by pressing **[✳]** repeatedly before entering the time.
7. Enter the desired hour and minute you wish to end this feature by selecting 2 digits for each.
   - If you use 12-hour time entry, select **"AM"** or **"PM"** by pressing **[✳]** repeatedly before entering the time.
8. Press **[☰/OK]**.
9. Press **[OFF]**.

Turning night mode on/off

1. Press **[☰/OK]**.
2. Select **"Handset Setup"**, then press **[▶]**.
3. Select **"Ringer Setup"**, then press **[▶]**.
4. Select **"Night Mode"**, then press **[▶]**.
5. Select **"On/Off"**, then press **[▶]**.
6. Select **"On"** or **"Off"**, then press **[▶]**.
7. Press **[OFF]**.

Note:

- When the night mode is turned on, **"[N]"** is displayed.

Setting the ring delay for night mode

This setting allows the handset to ring during night mode if the caller waits long enough. After the selected amount of time passes, the handset will ring, useful when someone urgently needs to speak with you. If you select **"No Ringing"**, the handset will not ring during night mode.

1. Press **[☰/OK]**.
2. Select **"Handset Setup"**, then press **[▶]**.
3. Select **"Ringer Setup"**, then press **[▶]**.
4. Select **"Night Mode"**, then press **[▶]**.
5. Select **"Ring Delay"**, then press **[▶]**.

TG1810_1822AL(e-e).book Page 30 Tuesday, March 1, 2005 6:46 PM

6 Select the desired setting, then press 【▶】.

7 Press 【✂⏻】.

Selecting categories to bypass night mode

1 Press 【☰/OK】.

2 Select "**Handset Setup**", then press 【▶】.

3 Select "**Ringer Setup**", then press 【▶】.

4 Select "**Night Mode**", then press 【▶】.

5 Select "**Select Category**", then press 【▶】.

6 Press the desired category numbers, then press 【☰/OK】.
- The selected category number will flash.
- To cancel a selected category number, press the number again. The number will stop flashing.

7 Press 【✂⏻】.

Note:
- If a call is received from one of the categories set to bypass night mode, only the handset will ring.

Display setup

Selecting the standby mode display

"**Base Number**": The current base unit number is displayed.
"**Handset Number**": The current handset number is displayed.
"**Off**": Only the current date and time are displayed.

1 Press 【☰/OK】.

2 Select "**Handset Setup**", then press 【▶】.

3 Select "**Display Setup**", then press 【▶】.

4 Select "**Standby Display**", then press 【▶】.

5 Select the desired setting, then press 【▶】.

6 Press 【✂⏻】.

Note:
- If "**Base Number**" is selected and the current base unit number is 2, "**-2-**" is displayed.
- If "**Handset Number**" is selected and the current handset number is 2, "**[2]**" is displayed.

Changing the display language

1 Press 【☰/OK】.

2 Select "**Handset Setup**", then press 【▶】.

3 Select "**Display Setup**", then press 【▶】.

4 Select "**Select Language**", then press 【▶】.

5 Select the desired language, then press 【▶】.

6 Press 【✂⏻】.

Note:
- If you select a language you cannot read, press 【✂⏻】, 【☰/OK】, press 【▲】 2 times, press 【▶】, press 【▼】 2 times, press 【▶】, press 【▼】, press 【▶】, select the desired language, then press 【▶】. Press 【✂⏻】.

Changing the display contrast

1 Press 【☰/OK】.

2 Select "**Handset Setup**", then press 【▶】.

3 Select "**Display Setup**", then press 【▶】.

TG1810_1822AL(e-e).book Page 31 Tuesday, March 1, 2005 6:46 PM

4 Select “**Contrast**”, then press **[▶]**.

5 Press **[▲]** or **[▼]** repeatedly to select the desired contrast, then press **[▶]**.

6 Press **[OFF]**.

Call options

Turning call bar on/off

This feature prohibits making outside calls. When call bar is turned on, only intercom calls and calls to emergency numbers (page 35) can be made.

1 Press **[MENU/OK]**.

2 Select “**Handset Setup**”, then press **[▶]**.

3 Select “**Call Options**”, then press **[▶]**.

4 Select “**Call Bar**”, then press **[▶]**.

5 Enter “**0000**” (default handset PIN).
- If you changed the PIN, enter it (page 31).

6 Select “**On**” or “**Off**”, then press **[▶]**.

7 Press **[OFF]**.

Note:

- When call bar is turned on, is displayed.

Turning auto talk on/off

When this feature is turned on, you can answer calls simply by lifting the handset off the base unit. You do not need to press **[TALK]**.

1 Press **[MENU/OK]**.

2 Select “**Handset Setup**”, then press **[▶]**.

3 Select “**Call Options**”, then press **[▶]**.

4 Select “**Auto Talk**”, then press **[▶]**.

5 Select “**On**” or “**Off**”, then press **[▶]**.

6 Press **[OFF]**.

Other options

Changing the handset PIN (Personal Identification Number)

For security, the handset PIN must be entered when changing certain settings. The default PIN is “**0000**”.

Important:

- If you change the PIN, please make note of your new PIN. The unit will not reveal the PIN to you. If you forget your PIN, consult your nearest Panasonic service centre.

1 Press **[MENU/OK]**.

2 Select “**Handset Setup**”, then press **[▶]**.

3 Select “**Other Options**”, then press **[▶]**.

4 Select “**Handset PIN**”, then press **[▶]**.

5 Enter the current 4-digit handset PIN.

6 Enter the new 4-digit handset PIN, then press **[MENU/OK]**.

7 Press **[OFF]**.

Changing the LetterWise® language

You can change which language is used for LetterWise character entry (page 47, 62).

1 Press **[MENU/OK]**.

2 Select “**Handset Setup**”, then press **[▶]**.

3 Select “**Other Options**”, then press **[▶]**.

4 Select “**LetterWise**”, then press **[▶]**.

5 Select the desired language, then press **[▶]**.

TG1810_1822AL(e-e).book Page 32 Tuesday, March 1, 2005 6:46 PM

6 Press **[ ]**.

Turning keytones on/off

Keytones are tones heard when keys are pressed. Includes confirmation tones and error tones.

1 Press **[/OK]**.

2 Select **"Handset Setup"**, then press **[ ]**.

3 Select **"Other Options"**, then press **[ ]**.

4 Select **"Keytones"**, then press **[ ]**.

5 Select **"On"** or **"Off"**, then press **[ ]**.

6 Press **[ ]**.

Note:

- If keytones are turned off, error tones will not sound when you enter the wrong PIN or when memory is full.

Resetting the handset to its default settings

1 Press **[/OK]**.

2 Select **"Handset Setup"**, then press **[ ]**.

3 Select **"Other Options"**, then press **[ ]**.

4 Select **"Reset Handset"**, then press **[ ]**.

5 Enter **"0000"** (default handset PIN).
- If you changed the PIN, enter it (page 31).

6 Select **"Yes"**, then press **[ ]**.

7 Press **[ ]**.

Note:

- The following items will be deleted or reset to their default settings:
  - Settings listed on page 27
  - Redial list
  - Voice enhancer
  - Category names
  - Category ringtones
- The following items will be retained:
  - Handset phonebook entries (category names and ringtones will be reset to their default settings.)
  - Date and time

TG1810_1822AL(e-e).book Page 33 Tuesday, March 1, 2005 6:46 PM

Guide to base unit settings

For your reference, a chart of all items which can be customised for the base unit is printed below.

- When customising the base unit, the current item or setting is indicated by ▶.

Base unit settings menu	Sub-menu	Sub-menu 2	Default setting	Page
Ringer Setup	Ringer Volume		*Medium*	page 34
	Night Mode	Start/End	*23:00/06:00*	page 34
		On/Off	Off	page 34
		Ring Delay	60 sec.	page 34
Call Options	Recall		100 msec.	page 35
	Pause Length		3 sec.	page 35
	Emergency No.		000, 106	page 35
	ARS Settings	Area Code	—	page 36
	Call Restrict		—	page 36
Other Options	Base Unit PIN		0000	page 36
	Repeater Mode		Off	page 58
	Reset Base		—	page 37

Note:

- Up to 3 menu items can be displayed at a time. To select a menu item not shown on the current page, scroll up or down by pressing the navigator key, 【▲】 or 【▼】, respectively.

TG1810_1822AL(e-e).book Page 34 Tuesday, March 1, 2005 6:46 PM

Ringer setup

Ringer volume

1 Press **[☰/OK]**.

2 Select **"Base Unit Setup"**, then press **[▶]**.

3 Enter **"0000"** (default base unit PIN).
- If you changed the PIN, enter it (page 36).

4 Select **"Ringer Setup"**, then press **[▶]**.

5 Select **"Ringer Volume"**, then press **[▶]**.

6 Press **[▲]** or **[▼]** repeatedly to select the desired volume.

7 Press **[▶]**.

8 Press **[OFF]**.

Night mode

Night mode allows you to select a block of time during which the base unit will not ring for outside calls. This feature is useful for times when you do not want to be disturbed, for example, while sleeping. Night mode can be set independently for the handset (page 29) and the base unit.
Set the date and time beforehand (page 15).

Note:
- When the message alert feature is on and new messages are recorded, the base unit will beep even if the night mode setting is on (KX-TG1822 only).

Setting the start and end time for night mode

1 Press **[☰/OK]**.

2 Select **"Base Unit Setup"**, then press **[▶]**.

3 Enter **"0000"** (default base unit PIN).
- If you changed the PIN, enter it (page 36).

4 Select **"Ringer Setup"**, then press **[▶]**.

5 Select **"Night Mode"**, then press **[▶]**.

6 Select **"Start/End"**, then press **[▶]**.

7 Enter the desired hour and minute you wish to start this feature by selecting 2 digits for each.
- If you use 12-hour time entry, select **"AM"** or **"PM"** by pressing **[✳]** repeatedly before entering the time.

8 Enter the desired hour and minute you wish to end this feature by selecting 2 digits for each.
- If you use 12-hour time entry, select **"AM"** or **"PM"** by pressing **[✳]** repeatedly before entering the time.

9 Press **[☰/OK]**.

10 Press **[OFF]**.

Turning night mode on/off

1 Press **[☰/OK]**.

2 Select **"Base Unit Setup"**, then press **[▶]**.

3 Enter **"0000"** (default base unit PIN).
- If you changed the PIN, enter it (page 36).

4 Select **"Ringer Setup"**, then press **[▶]**.

5 Select **"Night Mode"**, then press **[▶]**.

6 Select **"On/Off"**, then press **[▶]**.

7 Select **"On"** or **"Off"**, then press **[▶]**.

8 Press **[OFF]**.

Setting the ring delay for night mode

This setting allows the base unit to ring during night mode if the caller waits long enough. After the selected amount of time passes, the base unit will ring, useful when someone urgently needs to speak with you.

TG1810_1822AL(e-e).book Page 35 Tuesday, March 1, 2005 6:46 PM

If you select “**No Ringing**”, the base unit will not ring during night mode.

1 Press **【☰/OK】**.
2 Select “**Base Unit Setup**”, then press **【▶】**.
3 Enter “**0000**” (default base unit PIN).
- If you changed the PIN, enter it (page 36).

4 Select “**Ringer Setup**”, then press **【▶】**.
5 Select “**Night Mode**”, then press **【▶】**.
6 Select “**Ring Delay**”, then press **【▶】**.
7 Select the desired setting, then press **【▶】**.
8 Press **【✂⏻】**.

Call options

Changing the recall time

Change the recall time, if necessary, depending on the requirements of your service provider or PBX.

1 Press **【☰/OK】**.
2 Select “**Base Unit Setup**”, then press **【▶】**.
3 Enter “**0000**” (default base unit PIN).
- If you changed the PIN, enter it (page 36).

4 Select “**Call Options**”, then press **【▶】**.
5 Select “**Recall**”, then press **【▶】**.
6 Select the desired setting, then press **【▶】**.
7 Press **【✂⏻】**.

Setting pause length

Change the pause length, if necessary, depending on the requirements of your service provider or PBX.

1 Press **【☰/OK】**.
2 Select “**Base Unit Setup**”, then press **【▶】**.
3 Enter “**0000**” (default base unit PIN).
- If you changed the PIN, enter it (page 36).

4 Select “**Call Options**”, then press **【▶】**.
5 Select “**Pause Length**”, then press **【▶】**.
6 Select the desired setting, then press **【▶】**.
7 Press **【✂⏻】**.

Storing/changing emergency numbers

These settings determine which phone numbers can be dialled while the call bar feature is on (page 31).

1 Press **【☰/OK】**.
2 Select “**Base Unit Setup**”, then press **【▶】**.
3 Enter “**0000**” (default base unit PIN).
- If you changed the PIN, enter it (page 36).

4 Select “**Call Options**”, then press **【▶】**.
5 Select “**Emergency No.**”, then press **【▶】**.
6 Select a memory location, then press **【▶】**.
- If the memory location already contains an emergency number, the number is displayed.

7 Enter/edit the number, then press **【☰/OK】**.
- To erase an emergency number, press and hold **【C/⊠】**.

8 Press **【✂⏻】**.

TG1810_1822AL(e-e).book Page 36 Tuesday, March 1, 2005 6:46 PM

Selecting area codes to be deleted automatically

In some situations, phone numbers stored automatically in the Caller ID list (page 39) will include area codes. If you do not want to dial the area codes when making calls from the Caller ID list, you can store the area codes which you want the unit to delete automatically.

Example: You have stored the area code **"123"**. If you make a call from the Caller ID list to the phone number **"123-456-7890"**, the unit dials **"456-7890"**.

1 Press **【☰/OK】**.
2 Select **"Base Unit Setup"**, then press **【▶】**.
3 Enter **"0000"** (default base unit PIN).
- If you changed the PIN, enter it (page 36).

4 Select **"Call Options"**, then press **【▶】**.
5 Select **"ARS Settings"**, then press **【▶】**.
6 Select **"Area Code"**, then press **【▶】**.
7 Select an area code location (1-4), then press **【▶】**.
- If the location already contains an area code, the code is displayed.

8 Enter an area code (5 digits max.), then press **【☰/OK】**.
9 Press **【✆⏻】**.

Setting call restriction

You can restrict selected handsets from dialling certain numbers. You can assign up to 6 phone numbers to be restricted, and select which handsets will be restricted. Storing area codes here will prevent the restricted handsets from dialling any phone number in that area code. If a restricted number is dialled, the call will not be connected and the restricted number will flash on the display.

1 Press **【☰/OK】**.
2 Select **"Base Unit Setup"**, then press **【▶】**.
3 Enter **"0000"** (default base unit PIN).
- If you changed the PIN, enter it (page 36).

4 Select **"Call Options"**, then press **【▶】**.
5 Select **"Call Restrict"**, then press **【▶】**.
6 Set which handsets will be restricted by pressing the desired handset number.
- All the registered handset numbers will be displayed.
- Flashing numbers indicate call restriction is turned on for the corresponding handset.
- To turn call restriction off for a handset, press the number again. The number will stop flashing.

7 Press **【☰/OK】**.
8 Select a memory location, then press **【▶】**.
- If the memory location already contains a restricted number, the number is displayed.

9 Enter the phone number or area code to be restricted (8 digits max.), then press **【☰/OK】**.
- To erase a restricted number, press **【C/⌫】**.

10 Press **【✆⏻】**.

Other options

Changing the base unit PIN (Personal Identification Number)

For security, the base unit PIN must be entered when changing certain settings. The default PIN is **"0000"**.

TG1810_1822AL(e-e).book Page 37 Tuesday, March 1, 2005 6:46 PM

Important:

- If you change the PIN, please make note of your new PIN. The unit will not reveal the PIN to you. If you forget your PIN, consult your nearest Panasonic service centre.

1 Press **【☰/OK】**.

2 Select **"Base Unit Setup"**, then press **【▶】**.

3 Enter **"0000"** (default base unit PIN).
- If you changed the PIN, enter it.

4 Select **"Other Options"**, then press **【▶】**.

5 Select **"Base Unit PIN"**, then press **【▶】**.

6 Enter the new 4-digit base unit PIN, then press **【☰/OK】**.

7 Press **【✆】**.

Resetting the base unit to its default settings

1 Press **【☰/OK】**.

2 Select **"Base Unit Setup"**, then press **【▶】**.

3 Enter **"0000"** (default base unit PIN).
- If you changed the PIN, enter it (page 36).

4 Select **"Other Options"**, then press **【▶】**.

5 Select **"Reset Base"**, then press **【▶】**.

6 Select **"Yes"**, then press **【▶】**.

7 Press **【✆】**.

Note:

- The following items will be deleted or reset to their default settings:
  - Settings listed on page 33, 45, 54
  - All SMS messages
  - Private mailbox settings for SMS
  - Caller list
- The following items will be retained:
  - Date and time
  - Shared phonebook entries (KX-TG1822 only)
  - Repeater mode
  - Recordings, including your greeting message, caller messages, voice memos, audible call announcements, and recorded conversations (KX-TG1822 only)

TG1810_1822AL(e-e).book Page 38 Tuesday, March 1, 2005 6:46 PM

Using Caller ID service

Important:

- This unit is Caller ID compatible. To use Caller ID features (such as displaying caller phone numbers), you must subscribe to Caller ID service. Consult your service provider for details.

Caller ID features

When an outside call is received, the caller's phone number can be displayed.

- Phone numbers of the last 50 different callers will be logged in the caller list.
- While listening to a message recorded by the answering system, you can call back the caller without having to dial the phone number (KX-TG1822 only; page 50).
- When caller information is received and it matches a phone number stored in the unit's phonebook:
  - The stored name will be displayed and logged in the caller list.
  - The handset will use the ringtone assigned to the caller's category.
  - The handset will announce the audible call recording you made (KX-TG1822 only).
- If the unit is connected to a PBX system, you may not receive the caller information.
- When the caller dialled from an area which does not provide Caller ID service, **"`Out of Area`"** will be displayed.
- When the caller requested not to send caller information, either no information or **"`Private Caller`"** will be displayed.

Missed calls

If a call is not answered, the unit treats the call as a missed call. The number of missed calls is shown on the display. This lets you know if you should view the caller list to see who called while you were out.

Call waiting and Caller ID compatible

If you subscribe to Caller ID service, your handset displays the second caller's information while talking. After you hear a call-waiting tone, the caller's phone number will be displayed.

You can answer the second call, keeping the first call on hold. Follow Telstra or your service provider instructions using **【R】**.

- If the phone number is stored in the phonebook with its name, the caller's name will also be displayed.
- Please contact Telstra or your service provider for details and availability in your area.

Using Caller ID type II

When you receive a second call during a conversation, you will hear a signal tone following the call waiting tone and the **conversation will be interrupted or muted for a short period of time.** This is not the fault of the product as these events are normal.

Note:

- The tones are generated by the service provider.

Category features for handset phonebook

Categories can help you identify who is calling by using different ringtones for different categories of callers. When adding an entry to the handset phonebook you can assign it to the desired category (page 21). When a call is received from a caller assigned to a category, the category's ringtone you select is used.

Changing category ringtones

You can select a ringtone for each category. If you select **"`Ext. Ringtone`"**, the unit will use the external ringtone you set on

TG1810_1822AL(e-e).book Page 39 Tuesday, March 1, 2005 6:46 PM

page 28 when calls from this category are received. The default setting is "**Ext. Ringtone**".

1 Press 【📖】, then press 【☰/OK】.
2 Select "**Category**", then press 【▶】.
3 Select a category, then press 【▶】.
4 Select the current setting of the category ringtone, then press 【▶】.
5 Select the desired ringtone, then press 【▶】.
6 Press 【✂⏻】.

Audible call for shared phonebook (KX-TG1822 only)

Audible call allows you to know who is calling without looking at the display. If you record an audible call announcement for a shared phonebook entry (page 24), the audible call recording will be announced when you receive a call from that person.

Note:

- If the handset ringer is turned off, audible call announcements will not be heard.

Caller list

Viewing the caller list and calling back

Phone numbers of the last 50 different callers will be logged in the caller list. When the 51st call is received, the oldest caller information will be automatically erased. You can use this list to return missed calls.

1 Press 【☰/OK】.
2 Select "**Caller List**", then press 【▶】.
   - The most recent call is displayed.
3 Press 【▼】 repeatedly to search from the most recent call, or press 【▲】 repeatedly to search from the oldest call.
   - If the item has already been viewed or answered, "✓" is displayed, even if it was viewed or answered using another handset.
4 Press 【📞】 or 【🔊】 to call back the displayed party.

Note:

- If you do not want to dial the area codes when making calls from the Caller ID list, you can store the area codes which you want the unit to delete automatically (page 36).

Editing a caller's phone number before calling back

1 Press 【☰/OK】.
2 Select "**Caller List**", then press 【▶】.
3 Press 【▲】 or 【▼】 repeatedly to display the desired entry.
4 **To add a number**
Press the dial key (【0】 to 【9】).
   - The number you pressed is added to the top of the current number.

   To erase a number
   Press 【☰/OK】, select "**Edit and Call**", then press 【▶】.
   Press 【◀】 or 【▶】 to place the cursor on the number you wish to erase, then press 【C/⌫】.
5 Press 【📞】 or 【🔊】.

Erasing caller information

1 Press 【☰/OK】.
2 Select "**Caller List**", then press 【▶】.
3 Press 【▲】 or 【▼】 repeatedly to display the desired entry, then press 【☰/OK】.
4 Select "**Erase**", then press 【▶】.
   - To erase all entries, select "**Erase All**", then press 【▶】.

TG1810_1822AL(e-e).book Page 40 Tuesday, March 1, 2005 6:46 PM

5 Select **"Yes"**, then press **[▶]**.

6 Press **[⚡⏻]**.

Storing caller information into the handset phonebook

1 Press **[▤/OK]**.

2 Select **"Caller List"**, then press **[▶]**.

3 Press **[▲]** or **[▼]** repeatedly to display the desired entry, then press **[▤/OK]**.

4 Select **"Add Phonebook"**, then press **[▶]**.

5 Continue from step 3, "Adding entries to the handset phonebook", page 21.

Voice mail service

Voice mail is an automatic answering service offered by your service provider. If you subscribe to this service, your service provider's voice mail system can answer calls for you when you are unavailable to answer the phone or when your line is busy. Messages are recorded by the service provider, not your telephone.

TG1810_1822AL(e-e).book Page 41 Tuesday, March 1, 2005 6:46 PM

Using SMS (Short Message Service)

SMS allows you to send and receive text messages between other fixed-line and mobile phones that support compatible SMS networks and features.

Important:

- To use SMS features, you must:
  - subscribe to the Caller ID and/or appropriate service
  - confirm SMS is turned on
  - confirm the correct message centre numbers are stored

  Consult your service provider for details and availability.

If you have requested that your service provider block your phone number when making phone calls, you will not be able to send SMS messages. In order to send messages, you need to add "1832" to the beginning of the Message Centre 1 number. Note that by doing so, your phone number will be sent along with your SMS messages.

Using public mailbox and private mailboxes

SMS messages can be sent to and received from a public mailbox or any one of the 6 private mailboxes available in this unit. Public mailbox can be accessed freely without password protection. For privacy, private mailboxes are password protected.

Important:

- To use any of the private mailboxes, you must create private mailboxes (store the name and password; page 45).

Note:

- A total of 47 messages (at 160 characters/message) in all mailboxes added together can be saved. Total number may be more than 47 if length of messages are less than 160 characters/message.
- If the unit is connected to a PBX system, you may not be able to use SMS features.

Turning SMS on/off

The default setting is **"On"**.

1 Press **【☰/OK】**.

2 Select **"SMS"**, then press **【▶】**.

3 Select **"Public"**, then press **【▶】**.

4 Select **"Settings"**, then press **【▶】**.

5 Enter **"0000"** (default base unit PIN).
- If you changed the PIN, enter it (page 36).

6 Select **"SMS On/Off"**, then press **【▶】**.

7 Select **"On"** or **"Off"**, then press **【▶】**.

8 Press **【✂⏻】**.

Note:

- If you try to send a message while SMS is turned off, a tone sounds and the message is placed in the receive list with **"FD"** attached to it.
- If someone tries to send you a message while SMS is turned off, the message will not be received and the message centre number will be logged in the caller list.

Changing SMS message centre numbers

SMS message centre telephone numbers must be stored in order to send and receive SMS messages.
The following numbers (used for SMS services provided by Telstra) are preprogrammed in this unit. You can change them if necessary.

– Message Centre 1: 01983391

TG1810_1822AL(e-e).book Page 42 Tuesday, March 1, 2005 6:46 PM

– Message Centre 2: 01983391

Message Centre 1 is used for sending SMS messages, and Message Centre 2 is used for receiving messages.

- Consult your service provider for more information.

1 Press **【▤/OK】**.

2 Select **"SMS"**, then press **【▸】**.

3 Select **"Public"**, then press **【▸】**.

4 Select **"Settings"**, then press **【▸】**.

5 Enter **"0000"** (default base unit PIN).
- If you changed the PIN, enter it (page 36).

6 Select **"Message Centre1"** or **"Message Centre2"**, then press **【▸】**.

7 Edit the number as necessary, then press **【▤/OK】**.

8 Select **"Save"**, then press **【▸】**.

9 Press **【✂⏻】**.

Note:

- If your phone is connected to a PBX, you need to add the PBX line access number and a dialling pause to the beginning of the Message Centre 1 phone number.

Sending a message

Writing and sending a new message

1 Press **【▤/OK】**.

2 Select **"SMS"**, then press **【▸】**.

3 **To access the public mailbox**
Select **"Public"**, then press **【▸】**.
To access a private mailbox
Select the desired mailbox, press **【▸】**, then enter its password.

4 Select **"Create"**, then press **【▸】**.
- If **"▲Use Last Text?"** is displayed, you can use the text from the last message you created by pressing **【▲】**. This message will be displayed only if the last message was created using the same mailbox you selected in step 3.

5 Enter the message (page 47), then press **【▤/OK】**.

6 Enter the destination phone number (20 digits max.), then press **【▤/OK】**.
- To send the message to a party saved in the handset phonebook, press **【📖】**, select the handset phonebook entry, then press **【▤/OK】** 2 times.
- To send the message to a party logged in the caller list, press **【▲】** or **【▼】** repeatedly to select the party, then press **【▤/OK】** 2 times.
- To send the message to a phone number logged in the redial list, press **【↻】** repeatedly to select the phone number, then press **【▤/OK】** 2 times.
- If you wish to send the message to the other party's mailbox, enter the other party's mailbox number after the destination phone number.

  Example: The other party's phone number is 123456 and their mailbox number is 1.

  Enter 1234561.

  If you do not enter the other party's mailbox number, the message will be sent to the public mailbox.

7 To save the message, select **"Yes"**, then press **【▸】**.
- To send the message without saving it, select **"No"**, then press **【▸】**.

8 To send the message, select **"Send"**, then press **【▸】**.
- To cancel sending, press **【✂⏻】**.

Note:

- This unit supports SMS messages of up to 612 characters, however, the maximum

TG1810_1822AL(e-e).book Page 43 Tuesday, March 1, 2005 6:46 PM

number of characters you can send or receive may be limited by your SMS service provider. Consult your SMS service provider for details.

- If your message contains over 160 characters, **"**Long Message**"** is displayed. Your service provider may treat long messages differently from other messages. Consult your service provider for details.
- **"Invalid Number"** is displayed if you try to send a message to a phone number saved in the handset phonebook, caller list, or redial list that is over 20 digits long.
- When sending a message, **"Sending Message"** is displayed momentarily, then **"Transferring Message"** is displayed.
- If your phone is connected to a PBX, store the PBX line access number (page 46).

Sending a saved message

1 Press **[☰/OK]**.

2 Select **"SMS"**, then press **[▶]**.

3 **To access the public mailbox**
Select **"Public"**, then press **[▶]**.
To access a private mailbox
Select the desired mailbox, press **[▶]**, then enter its password.

4 Select **"Send List"**, then press **[▶]**.

5 To read a saved message, press **[▲]** or **[▼]** repeatedly to select the message, then press **[☰/OK]**.
- Messages are displayed in chronological order and by destination phone number.

6 To send the message, press **[☰/OK]**, select **"Send"**, then press **[▶]**.

7 Press and hold **[C/⊠]** to erase all numbers, then continue from step 6, "Writing and sending a new message", page 42.

Editing and sending a saved message

1 Press **[☰/OK]**.

2 Select **"SMS"**, then press **[▶]**.

3 **To access the public mailbox**
Select **"Public"**, then press **[▶]**.
To access a private mailbox
Select the desired mailbox, press **[▶]**, then enter its password.

4 Select **"Send List"**, then press **[▶]**.

5 Press **[▲]** or **[▼]** repeatedly to select the message, then press **[☰/OK]**.

6 Press **[☰/OK]**, select **"Edit Message"**, press **[▶]**, then continue from step 5, "Writing and sending a new message", page 42.

Erasing saved messages

1 Press **[☰/OK]**.

2 Select **"SMS"**, then press **[▶]**.

3 **To access the public mailbox**
Select **"Public"**, then press **[▶]**.
To access a private mailbox
Select the desired mailbox, press **[▶]**, then enter its password.

4 Select **"Send List"**, then press **[▶]**.

5 Press **[▲]** or **[▼]** repeatedly to select the message, then press **[☰/OK]**.

6 Press **[☰/OK]**, select **"Erase"**, then press **[▶]**.
- To erase all messages in the selected mailbox, select **"Erase All"**, then press **[▶]**.

7 Select **"Yes"**, then press **[▶]**.

8 Press **[⏻]**.

Receiving a message

When an SMS message is received:

TG1810_1822AL(e-e).book Page 44 Tuesday, March 1, 2005 6:46 PM

– a tone is heard (if the ringer is turned off, this tone is not heard)
– **"Receiving SMS Message"** is displayed
– ✉ is displayed

Reading a received message

1 Press **【☰/OK】**.

2 Select **"SMS"**, then press **【▶】**.

3 **To access the public mailbox**
Select **"Public"**, then press **【▶】**.
To access a private mailbox
Select the desired mailbox, press **【▶】**, then enter its password.
- If a mailbox contains new (unread) SMS messages, "∗" is displayed next to the total number of messages for that mailbox.

4 Select **"Receive List"**, then press **【▶】**.

5 Press **【▲】** or **【▼】** repeatedly to select a message.
- Messages which have already been read are indicated by a "✓", even if they were read using another handset.

6 Press **【☰/OK】** to read the message content.

Note:
- To call the message sender, press **【📞】** or **【🔊】**.
- If **"SMS Full"** is displayed, new SMS messages cannot be received. Erase unnecessary messages (page 43, 44).
- If you receive a message from a party saved in the handset phonebook, the stored name is displayed.
- Some SMS service providers attach a 1-digit number to the message sender's phone number, and sender names stored in the handset phonebook may not be displayed as a result.

Replying to a message

1 While reading a received message, press **【☰/OK】**.

2 Select **"Reply"**, then press **【▶】**.

3 Enter a message (page 47), then press **【☰/OK】**.

4 Edit the destination phone number and/or press **【☰/OK】**.

5 Continue from step 7, "Writing and sending a new message", page 42.

Editing/forwarding a message

1 While reading a received message, press **【☰/OK】**.

2 Select **"Edit Message"**, then press **【▶】**.

3 Continue from step 5, "Writing and sending a new message", page 42.

Erasing received messages

1 While reading a received message, press **【☰/OK】**.

2 Select **"Erase"**, then press **【▶】**.
- To erase all messages in the selected mailbox, select **"Erase All"**, then press **【▶】**.

3 Select **"Yes"**, then press **【▶】**.

4 Press **【⏻】**.

Storing the sender's number in the handset phonebook

1 While reading a received message, press **【☰/OK】**.

2 Select **"Add Phonebook"**, then press **【▶】**.

3 Continue from step 3, "Adding entries to the handset phonebook", page 21.

TG1810_1822AL(e-e).book Page 45 Tuesday, March 1, 2005 6:46 PM

Editing the sender's number before calling back

1 While reading a received message, press **【☰/OK】**.

2 Select **"Edit and Call"**, then press **【▶】**.

3 Edit the number, then press **【✆】** or **【🔊】**.

Guide to SMS settings

If the base unit is reset to its default settings (page 37), the following SMS-related settings will be reset.

SMS settings	Default setting	Page
SMS on/off	On	page 41
Message Centre 1	01983391	page 41
Message Centre 2	01983391	page 41
Private mailboxes	—	page 45
PBX line access number	Off	page 46

Note:

- If the base unit is reset to its default settings, the contents of the receive and send lists will be erased.

Creating private mailboxes

Private mailboxes can be used for sending and receiving SMS messages. Each private mailbox is password protected.

1 Press **【☰/OK】**.

2 Select **"SMS"**, then press **【▶】**.

3 Select **"Public"**, then press **【▶】**.

4 Select **"Settings"**, then press **【▶】**.

5 Enter **"0000"** (default base unit PIN).
- If you changed the PIN, enter it (page 36).

6 Select **"Private Mailbox"**, then press **【▶】**.

7 Select the desired new mailbox number (**"Mailbox1"** to **"Mailbox6"**), then press **【▶】**.

8 Enter a name for the mailbox (5 characters max., page 47), then press **【☰/OK】**.

TG1810_1822AL(e-e).book Page 46 Tuesday, March 1, 2005 6:46 PM

9 Enter a 4-digit password for the mailbox, then press **【▤/OK】**.

10 Select **"Save"**, then press **【▶】**.

11 Press **【✆⏻】**.

Note:

- To receive SMS messages using a mailbox, inform others of your mailbox number.

Changing private mailbox settings

You can change the password or name of the private mailbox and erase the mailbox.

1 Press **【▤/OK】**.

2 Select **"SMS"**, then press **【▶】**.

3 Select **"Public"**, then press **【▶】**.

4 Select **"Settings"**, then press **【▶】**.

5 Enter **"0000"** (default base unit PIN).
- If you changed the PIN, enter it (page 36).

6 Select **"Private Mailbox"**, then press **【▶】**.

7 Select the desired mailbox name, then press **【▶】** 2 times.

8 Enter the mailbox's 4-digit password.

9 Edit the mailbox name (5 characters max., page 47), then press **【▤/OK】**.
- To erase the mailbox, press and hold **【C/⌫】**, press **【▤/OK】**, select **"Yes"**, press **【▶】**, then press **【✆⏻】** to finish.

10 Enter a 4-digit password for the mailbox, then press **【▤/OK】**.

11 Select **"Save"**, then press **【▶】**.

12 Press **【✆⏻】**.

Note:

- If you change the name of a mailbox which has messages in the receive list, the messages will remain in the receive list under the new mailbox name.
- If you erase a mailbox, its messages will also be erased.

Storing the PBX line access number (for PBX users only)

Store your PBX line access number (4 digits max.) so that SMS messages are sent properly. When sending SMS messages to entries in the handset phonebook or redial list, the PBX line access number will be deleted.

1 Press **【▤/OK】**.

2 Select **"SMS"**, then press **【▶】**.

3 Select **"Public"**, then press **【▶】**.

4 Select **"Settings"**, then press **【▶】**.

5 Enter **"0000"** (default base unit PIN).
- If you changed the PIN, enter it (page 36).

6 Select **"PBX Access No."**, then press **【▶】**.

7 Select **"On"**, then press **【▶】**.

8 Enter your PBX line access code and a dialling pause, if necessary, then press **【▤/OK】**.

9 Select **"Save"**, then press **【▶】**.

10 Press **【✆⏻】**.

TG1810_1822AL(e-e).book Page 47 Tuesday, March 1, 2005 6:46 PM

Available character entries for SMS

Important:

- For character entry when entering the name for phonebook, etc., see page 62.

The dial keys are used to enter characters and numbers. Each dial key has multiple characters assigned to it. The available character entry modes are, LetterWise, Alphabet, Numeric, Greek, and Extended. When in Alphabet (ABC), Greek (ΑΒΓ), or Extended (AÄÅ) character entry modes, you can select which character is entered by pressing a dial key repeatedly.

- When the unit displays the character entry screen:
  - Press 【◀】 or 【▶】 to move the cursor.
  - Press dial keys to enter characters and numbers.
  - Press 【C/⊠】 to erase the character or number highlighted by the cursor. Press and hold 【C/⊠】 to erase all characters or numbers.
  - Press 【✳】 to switch between uppercase and lowercase.
  - To enter another character located on the same dial key, press 【▶】 to move the cursor to the next space, then press the appropriate dial key. (This is not necessary when entering text in LetterWise mode.)

Character entry modes

Several character entry modes are available. When the unit displays the character entry screen, press 【📖】, then select a character entry mode, and press 【▶】. The default mode is Alphabet.

LetterWise character table (for English)

LetterWise is a simplified text entry system which suggests the most likely letter to follow the previously entered text. Text can be input faster because the number of key presses are reduced. You can change which language is used for LetterWise character entry (page 31).

- Each time you press a dial key, LetterWise will suggest a character. If the suggested character is incorrect, press 【#】 repeatedly to display the desired character.

0	1	ABC 2	DEF 3	GHI 4	JKL 5	MNO 6	PQRS 7	TUV 8	WXYZ 9
Space 0	Space . @ / : ; ✳ # + - 1 " ’ , ! ¡ ? ¿ _ € £ $ ¥ ( ) [ ] { } & % \ ^ ~ | < > = ¤ §	A B C 2	D E F 3	G H I 4	J K L 5	M N O 6	P Q R S 7	T U V 8	W X Y Z 9
		a b c 2	d e f 3	g h i 4	j k l 5	m n o 6	p q r s 7	t u v 8	w x y z 9

SMS (Short Message Service)

Alphabet character table (ABC)

0	1	ABC 2	DEF 3	GHI 4	JKL 5	MNO 6	PQRS 7	TUV 8	WXYZ 9
Space 0	Space . @ / : ; ✱ # + - 1 " ’ , ! ¡ ? ¿ _ € £ $ ¥ ( ) [ ] { } & % \ ^ ~ | < > = ¤ §	A B C 2	D E F 3	G H I 4	J K L 5	M N O 6	P Q R S 7	T U V 8	W X Y Z 9
		a b c 2	d e f 3	g h i 4	j k l 5	m n o 6	p q r s 7	t u v 8	w x y z 9

Numeric entry table (0-9)

0	1	ABC 2	DEF 3	GHI 4	JKL 5	MNO 6	PQRS 7	TUV 8	WXYZ 9
0	1	2	3	4	5	6	7	8	9

Greek character table (ΑΒΓ)

0	1	ABC 2	DEF 3	GHI 4	JKL 5	MNO 6	PQRS 7	TUV 8	WXYZ 9
Space 0	Space . @ / : ; ✱ # + - 1 " ’ , ! ¡ ? ¿ _ € £ $ ¥ ( ) [ ] { } & % \ ^ ~ | < > = ¤ §	A B Γ 2	Δ E Z 3	H Θ I 4	K Λ M 5	N Ξ O 6	Π P Σ 7	T Y Φ 8	X Ψ Ω 9

Extended character table (AÄÅ)

0	1	ABC 2	DEF 3	GHI 4	JKL 5	MNO 6	PQRS 7	TUV 8	WXYZ 9
Space 0	Space . @ / : ; ✱ # + - 1 " ’ , ! ¡ ? ¿ _ € £ $ ¥ ( ) [ ] { } & % \ ^ ~ | < > = ¤ §	A À Á Â Ã Ä Å Æ B C Ç 2	D E È É Ê Ë Ẽ F 3	G Ğ H ı Ì Í Î Ï Ĩ İ 4	J K L 5	M N Ñ O Ò Ó Ô Õ Ö ø 6	P Q R S Ş ß 7	T U Ù Ú Û Ü Ũ V 8	W X Y Z 9
		a à á â ã ä å æ b c ç 2	d e è é ê ë ẽ f 3	g ğ h i ì í î ï ĩ ı 4	j k l 5	m n ñ o ò ó ô õ ö ø 6	p q r s Ş ß 7	t u ù ú û ü ũ v 8	w x y z 9

- The following are used for both uppercase and lowercase:

  ø Ş

TG1810_1822AL(e-e).book Page 49 Tuesday, March 1, 2005 6:46 PM

Answering system

The KX-TG1822 unit contains an answering system which can answer and record calls for you when you are unavailable to answer the phone. You can also record your own voice memos (page 51) and phone conversations (page 19).
For details about memory capacity, see page 51.

Important:

- Only 1 handset can access the answering system (listen to messages, record a greeting message, etc.) at a time.
- When callers leave messages, the unit records the day and time of each message. Make sure the date and time have been set (page 15).

Turning the answering system on/off

1 Press 【▤/OK】.
2 Select "**Answer System**", then press 【▶】.
3 Select "**Answer On**" or "**Answer Off**", then press 【▶】.
4 Press 【⚒⏻】.

Note:

- When the answering system is turned on:
  - ▭ is displayed
  - the answer on indicator on the base unit lights

Greeting message

When the unit answers a call, callers are greeted by a greeting message. You can record your own greeting message or use a prerecorded greeting message.

Recording a greeting message

You can record your own greeting message (2 minutes and 30 seconds max.).

1 Press 【▤/OK】.
2 Select "**Answer System**", then press 【▶】.
3 Select "**Record**", then press 【▶】.
4 Select "**Record Greeting**", then press 【▶】.
   - Hold the handset about 20 cm away and speak clearly into the microphone.
5 Press 【▤/OK】 to stop recording.
   - The greeting message is played back.
6 Press 【⚒⏻】.

Note:

- To erase the greeting message, press 【✱】, 【6】 during playback.
- "**Error**" is displayed if the greeting message is less than 1 second long.

Using a prerecorded greeting message

If you erase or do not record your own greeting message, the unit can play a prerecorded greeting message for callers and ask them to leave messages. If the message recording time (page 54) is set to "**Greeting Only**", caller messages will not be recorded and the unit will play a different prerecorded greeting message asking callers to call again.

Playing back the greeting message

1 Press 【▤/OK】.
2 Select "**Answer System**", then press 【▶】.
3 Select "**Play Greeting**", then press 【▶】.
4 Press 【⚒⏻】.

TG1810_1822AL(e-e).book Page 50 Tuesday, March 1, 2005 6:46 PM

Erasing the greeting message

If you erase your own greeting message, the unit will play a prerecorded greeting message for callers.

1 Press 【▤/OK】.
2 Select "**Answer System**", then press 【▶】.
3 Select "**Erase Message**", then press 【▶】.
4 Select "**Erase Greeting**", then press 【▶】.
5 Select "**Yes**", then press 【▶】.
6 Press 【✂⏻】.

Listening to messages

Messages are stored and played back chronologically, from oldest message to newest.

Listening to new/all messages

When you have new messages:
– the answer on indicator on the base unit flashes
– the total number of new messages is displayed
– the base unit beeps about once a minute if the message alert feature (page 55) has been turned on

1 Press 【▤/OK】.
2 Select "**Answer System**", then press 【▶】.
3 Select "**Play New Msg.**" or "**Play All Msg.**", then press 【▶】.

Note:

- To adjust the speaker volume during playback, press 【▲】 or 【▼】 repeatedly.
- After playing back all of the new messages, the answer on indicator will stop flashing but will remain lit up when the answering system is turned on.
- While listening to messages, you can switch between the receiver and speaker by pressing 【📞】 or 【🔊】.

Repeating, skipping, stopping, erasing a message during playback

- To repeat a message during playback, press 【◀】. If pressed within the first 5 seconds of a message, the previous message will be played.
- To skip a message during playback, press 【▶】.
- To stop a message during playback, press 【9】.
- To erase a message during playback, press 【✳】, 【4】.

Erasing all messages

1 Press 【▤/OK】.
2 Select "**Answer System**", then press 【▶】.
3 Select "**Erase Message**", then press 【▶】.
4 Select "**Erase All**", then press 【▶】.
5 Select "**Yes**", then press 【▶】.
6 Press 【✂⏻】.

Note:

- The greeting message is not erased.

Calling back (Caller ID subscribers only)

If caller information was received for the call, you can call the caller back while listening to a message.

1 Press 【▤/OK】 during playback.
2 Select "**Call Back**", then press 【▶】.

TG1810_1822AL(e-e).book Page 51 Tuesday, March 1, 2005 6:46 PM

Note:

- To edit the number before calling back, select **"Edit and Call"**, press **[▶]**, edit the number, then press **[C]** or **[SP-PHONE]**.

Recording a voice memo

To leave a private message for yourself or someone else, you can record up to 3 minutes of voice memo. This memo can be played back later, either directly or remotely.

1. Press **[MENU/OK]**.
2. Select **"Answer System"**, then press **[▶]**.
3. Select **"Record"**, then press **[▶]**.
4. Select **"Record Memo"**, then press **[▶]**.
   - Hold the handset about 20 cm away and speak clearly into the microphone.
5. Press **[MENU/OK]** to stop recording.
6. Press **[OFF]**.

Note:

- Voice memos are treated as new messages.
- **"Error"** is displayed if the voice memo is less than 1 second long.

Memory capacity

The total recording capacity (including your greeting message, caller messages, voice memos, audible call announcements, and recorded conversations) is about 15 minutes. A maximum of 64 messages can be recorded.

Note:

- If message memory becomes full, **"Answer Sys. Full"** is displayed and the answer on indicator on the base unit flashes rapidly. Erase unnecessary messages (page 50).
- Messages are retained even if a power failure occurs.

TG1810_1822AL(e-e).book Page 52 Tuesday, March 1, 2005 6:46 PM

Using direct commands

You can operate the answering system by pressing dial keys, rather than navigating through the menus. To use the following commands, press 【▤/OK】, select "**Answer System**", then press 【▶】.

Key	Direct commands
【1】	Repeat message (during playback)*1
【2】	Skip message (during playback)
【3】	Enter the "**Settings**" menu
【4】	Play new messages
【5】	Play all messages
【6】	Play greeting message
【7】【4】	Record memo message
【7】【6】	Record greeting message
【8】	Turn answering system on
【9】	Stop (recording, playback)
【0】	Turn answering system off
【✱】【4】	Erase this message (during playback)
【✱】【5】	Erase all messages
【✱】【6】	Erase greeting message

*1 If pressed within the first 5 seconds of a message, the previous message will be played.

Remote operation

Using a touch tone phone, you can call your phone number from outside and access the unit to listen to messages or change answering system settings. The unit's voice guidance will prompt you to press certain dial keys to perform different operations.

Important:

- In order to operate the answering system remotely, you must first turn on remote operation by setting a remote access code. This code must be entered each time you operate the answering system remotely.

Turning remote operation on/off

A 3-digit remote access code must be entered when operating the answering system remotely. This code prevents unauthorised parties from listening to your messages remotely. After you store your remote access code, remote operation is possible.

1. Press 【▤/OK】.
2. Select "**Answer System**", then press 【▶】.
3. Select "**Settings**", then press 【▶】.
4. Select "**Remote Code**", then press 【▶】.
5. To turn on remote operation, enter a 3-digit remote access code.
   - To turn off remote operation, press 【✱】.
6. Press 【▤/OK】.
7. Press 【⏻】.

Using the answering system remotely

1. Dial your phone number from a touch tone phone.

TG1810_1822AL(e-e).book Page 53 Tuesday, March 1, 2005 6:46 PM

- If the number of rings is set to **"Auto"**, (page 54), the number of rings you hear will indicate whether or not you have new messages.

2 After the greeting message starts, enter your remote access code.
- The unit will announce the number of new messages.
- After 3 seconds, voice guidance starts.

3 Follow the voice guidance prompts as necessary.

Note:
- You can hang up at any time.
- You can ignore the voice guidance and control the unit using remote commands (page 53).

Voice guidance

During remote operation, the unit's voice guidance will prompt you to press 【1】 to perform a specific operation, or press 【2】 to listen to more available operations. Operations are presented by voice guidance in the following order:
– Play back all messages
– Play back new messages
– Record a message
– Erase all messages
– Record your greeting message

Note:
- If less than 5 minutes of recording time is available, the unit will announce the remaining recording time after the last message is played back.
- If message memory is full, erase unnecessary messages (page 53).

Remote commands

You can press dial keys to access certain answering system functions without waiting for the voice guidance to prompt you.

Key	Remote command
【1】	Repeat message (during playback)*1
【2】	Skip message (during playback)
【4】	Play new messages
【5】	Play all messages
【6】	Play greeting message
【7】	Record greeting message
【9】	Stop (recording, playback)
【0】	Turn answering system off
【✳】【4】	Erase this message (during playback)
【✳】【5】	Erase all messages
【✳】【6】	Erase greeting message (during greeting message playback)
【✳】【#】	End remote operation (or hang up)

*1 If pressed within the first 5 seconds of a message, the previous message will be played.

Turning on the answering system remotely

If the answering system is off, you can turn it on remotely.

1 Dial your phone number from a touch tone phone.

2 Let the phone ring 15 times.
- A long beep will be heard.

3 Enter your remote access code within 10 seconds of the long beep.
- The greeting message is played back.

TG1810_1822AL(e-e).book Page 54 Tuesday, March 1, 2005 6:46 PM

- You can hang up, or enter your remote access code again and begin remote operation.

Guide to answering system settings

If the base unit is reset to its default settings (page 37), the following answering system-related settings will be reset.

Answering system setting	Default setting	Page
Answering system on/off	**Answer On**	page 49
Remote access code	—	page 52
Number of rings	**4 Rings**	page 54
Caller's recording time	**3 Minutes**	page 54
Call screening	**On**	page 55
Message alert	**Off**	page 55

Changing the number of rings

You can change the number of times the phone rings before the unit answers calls. You can select 2 to 7 rings, or **"Auto"**.
"Auto": The unit answers after 2 rings when new messages have been recorded, and after 5 rings when there are no new messages. If you call your phone from outside to listen to new messages (page 52), you will know that there are no messages when the phone rings for the 3rd time. You can then hang up without being charged for the call.

1 Press **[▤/OK]**.
2 Select **"Answer System"**, then press **[▶]**.
3 Select **"Settings"**, then press **[▶]**.
4 Select **"Number of Rings"**, then press **[▶]**.
5 Select the desired setting, then press **[▶]**.
6 Press **[✆⏻]**.

For voice mail service subscribers
To receive voice mail and use answering system properly, please note the following:

– To use the voice mail service provided by your service provider rather than this unit's answering system, turn off the answering system (page 49).
– To use this unit's answering system rather than the voice mail service provided by your service provider, please consult your service provider to deactivate your voice mail service.
If your service provider cannot do this, set this unit's **"Number of Rings"** setting so that this unit's answering system answers calls before the service provider's voice mail service tries to answer your calls. It is necessary to check the number of rings required to activate the voice mail service provided by your service provider before changing this setting.

Selecting the caller's recording time

You can change the maximum message recording time allotted to each caller, or set the unit to greet callers but not record messages.

1 Press **[▤/OK]**.
2 Select **"Answer System"**, then press **[▶]**.
3 Select **"Settings"**, then press **[▶]**.
4 Select **"Recording Time"**, then press **[▶]**.

TG1810_1822AL(e-e).book Page 55 Tuesday, March 1, 2005 6:46 PM

5 Select the desired setting, then press **[▶]**.

6 Press **[OFF]**.

Turning call screening on/off

While a caller is leaving a message, you can screen the call through the handset speaker.

1 Press **[MENU/OK]**.

2 Select **"Answer System"**, then press **[▶]**.

3 Select **"Settings"**, then press **[▶]**.

4 Select **"Call Screening"**, then press **[▶]**.

5 Select **"On"** or **"Off"**, then press **[▶]**.

6 Press **[OFF]**.

Turning message alert on/off

This feature alerts you when new messages have been recorded. The base unit beeps about once a minute until you have listened to all new messages.

1 Press **[MENU/OK]**.

2 Select **"Answer System"**, then press **[▶]**.

3 Select **"Settings"**, then press **[▶]**.

4 Select **"New Msg. Alert"**, then press **[▶]**.

5 Select **"On"** or **"Off"**, then press **[▶]**.

6 Press **[OFF]**.

TG1810_1822AL(e-e).book Page 56 Tuesday, March 1, 2005 6:46 PM

Operating additional units

Additional handsets

Up to 6 handsets can be registered to a single base unit. Additional handsets will give you the freedom to, for example, have an intercom call with another handset while a third handset is on an outside call. See page 6 for information on ordering additional handsets.

Important:

- The additional handset model recommended for use with this unit is noted on page 6. If other model handset is used, certain operations (handset settings, base unit settings, etc.) may not be available.

Additional base units

Handsets can be registered to up to 4 base units, allowing you to add additional base units and extend the area in which your handset(s) can be used. If a handset moves out of range of its base unit when **"Auto"** is selected on base unit selection (page 57), it will look for another base unit to make or receive calls. A base unit and the handsets it communicates with is called a "radio cell".

Note:

- Calls will be disconnected when the handset moves from one radio cell to another.
- Intercom calls and call transfers are only possible between handsets in the same radio cell.

Registering a handset to a base unit

To register an additional handset to a base unit (easy registration)

The included handset and base unit are preregistered. After purchasing an additional handset, register it to the base unit. Ensure that the additional handset is switched on. If it is not on, press and hold 【OFF】 for few seconds to turn the handset on.

1. Lift the additional handset and press 【OFF】 to put the handset in standby mode.
2. Press and hold 【FIND】 on the base unit for about 3 seconds, until the registration tone sounds.
3. Place the additional handset on the base unit. The registration tone continues to sound. With the handset still on the base unit, wait until a confirmation tone sounds and Y stops flashing.

Note:

- If an error tone sounds, or if Y is still flashing, register the handset manually (manual registration; page 57).
- If all registered handsets start ringing in step 2, press 【FIND】 to stop. Start again from step 1.
- Charge the batteries of your additional handset for about 7 hours before initial use.
- This registration method cannot be used for handsets that have already been registered to a base unit. Register the handset manually (manual registration; page 57).

TG1810_1822AL(e-e).book Page 57 Tuesday, March 1, 2005 6:46 PM

To register a handset to an additional base unit (manual registration)

You can register a handset to a base unit manually using the following method.

1 Press **[☰/OK]**.

2 Select **"Handset Setup"**, then press **[▶]**.

3 Select **"Registration"**, then press **[▶]** 2 times.

4 Select a base unit number, then press **[▶]**.
- This number is used by the handset as a reference only.

5 Press and hold **[•))]** on the base unit for about 3 seconds, until the registration tone sounds.
- If all registered handsets start ringing, press **[•))]** to stop, then repeat this step.
- After pressing **[•))]**, the rest of this procedure must be completed within 1 minute.

6 Wait until **"Enter Base PIN"** is displayed, then enter **"0000"** (default base unit PIN), then press **[☰/OK]**.
- If you changed the PIN, enter it (page 36).
- When the handset has been registered successfully, Y will stop flashing. If keytones are turned on (page 32), a confirmation tone will be heard.

Selecting a base unit

When **"Auto"** is selected, the handset will automatically use any available base unit it is registered to. When a specific base unit is selected, the handset will make and receive calls using that base unit only. If the handset is out of range of that base unit, no calls can be made.

1 Press **[☰/OK]**.

2 Select **"Handset Setup"**, then press **[▶]**.

3 Select **"Select Base"**, then press **[▶]**.

4 Select the desired base unit number, or **"Auto"**, then press **[▶]**.
- The handset starts searching for the base unit.

Cancelling a handset

A maximum of 6 handsets can be registered to a base unit. A handset can cancel its own registration (or the registration of another handset) that is stored in the base unit. This will allow the base unit to "forget" the handset.

1 Press **[☰/OK]**.

2 Select **"Base Unit Setup"**, then press **[▶]**.

3 Enter **"0000"** (default base unit PIN).
- If you changed the PIN, enter it (page 36).

4 Enter **"335"**.

5 Select **"Cancel Handset"**, then press **[▶]**.
- The numbers of all handsets registered to the base unit are displayed.

6 Select the handset(s) you want to cancel, by pressing the desired handset number.
- The selected handset number(s) will flash.
- To cancel a selected handset number, press the number again. The number will stop flashing.

7 Press **[☰/OK]**.

8 Select **"Yes"**, then press **[▶]**.

9 Press **[C]**.

TG1810_1822AL(e-e).book Page 58 Tuesday, March 1, 2005 6:46 PM

Cancelling a base unit

A handset can be registered to a maximum of 4 base units. A handset can cancel a base unit that it is registered to. This allows the handset to "forget" the base unit.

1 Press 【▤/OK】.
2 Select "**Handset Setup**", then press 【▶】.
3 Select "**Registration**", then press 【▶】.
4 Enter "**335**".
5 Select "**Cancel Base**", then press 【▶】.
6 Enter "**0000**" (default handset PIN).
   - If you changed the PIN, enter it (page 31).
7 Select the base unit(s) you want to cancel, by pressing the desired base unit number.
   - The selected base unit number(s) will flash.
   - To cancel a selected base unit number, press the number again. The number will stop flashing.
8 Press 【▤/OK】.
9 Select "**Yes**", then press 【▶】.
10 Press 【⏻】.

Note:

- To register the handset to another base unit or to the same base unit again, see manual registration (page 57).

Increasing the range of the base unit

You can increase the range of the base unit by using a DECT repeater. Please use only the Panasonic DECT repeater noted on page 6. Consult your Panasonic dealer for details.

Important:

- Before registering the repeater to this base unit, you must turn the repeater mode on.

Turning the repeater mode on/off

1 Press 【▤/OK】.
2 Select "**Base Unit Setup**", then press 【▶】.
3 Enter "**0000**" (default base unit PIN).
   - If you changed the PIN, enter it (page 36).
4 Select "**Other Options**", then press 【▶】.
5 Select "**Repeater Mode**", then press 【▶】.
6 Select "**On**" or "**Off**", then press 【▶】.
7 Press 【⏻】.

Note:

- After turning repeater mode on/off, you will not be able to make or receive calls for a few moments.
- While the repeater mode is turned on, audible call announcements may not be heard (KX-TG1822 only).

Intercom between handsets

Intercom calls can be made between handsets in the same radio cell, but not between handsets in different radio cells.
Example: When handset 1 calls handset 2

1 **Handset 1:**
Press 【INT】 and 【2】 (desired handset number).
2 **Handset 2:**
Press 【📞】 or 【🔊】 to answer.
3 When finished talking, press 【⏻】.

TG1810_1822AL(e-e).book Page 59 Tuesday, March 1, 2005 6:46 PM

Transferring calls between handsets, conference calls

Outside calls can be transferred between 2 handsets in the same radio cell. 2 handsets in the same radio cell can have a conference call with an outside party.
Example: When handset 1 transfers a call to handset 2

1 **Handset 1:**
During an outside call, press **【INT】** and **【2】** (desired handset number).
- The outside call will be put on hold.
- If there is no answer, press **【INT】** to return to the outside call.

2 **Handset 2:**
Press **【】** or **【】** to answer the page.
- Handset 2 can talk with handset 1.

3 **Handset 1:**
To complete the call transfer, press **【】**.
To establish a conference call, press **【3】**.

Transferring a call without speaking to the other handset user

1 During an outside call, press **【INT】**, then press the desired handset number.
- The other handset rings if it is within range of the base unit and turned on.

2 Press **【】**.
- The outside call rings at the other handset.

Note:
- flashes to indicate the outside call is on hold.
- If the other handset user does not answer the call within 1 minute, the call will ring at your handset again.

TG1810_1822AL(e-e).book Page 60 Tuesday, March 1, 2005 6:46 PM

Wall mounting

Wall mounting the base unit

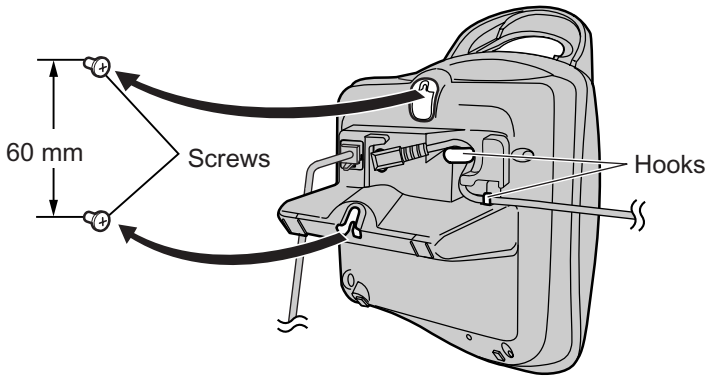

Note:

- Make sure the screws are securely fastened to the wall.
- Do not pinch the telephone line cord and AC adaptor cord between the base unit and the wall.
- Use the following wall template to position the screws before drilling.

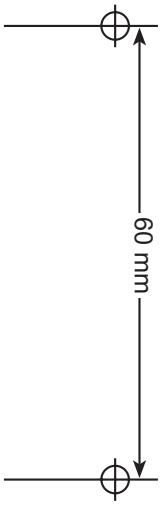

TG1810_1822AL(e-e).book Page 61 Tuesday, March 1, 2005 6:46 PM

Wall mounting the charger (KX-TG1822 only)

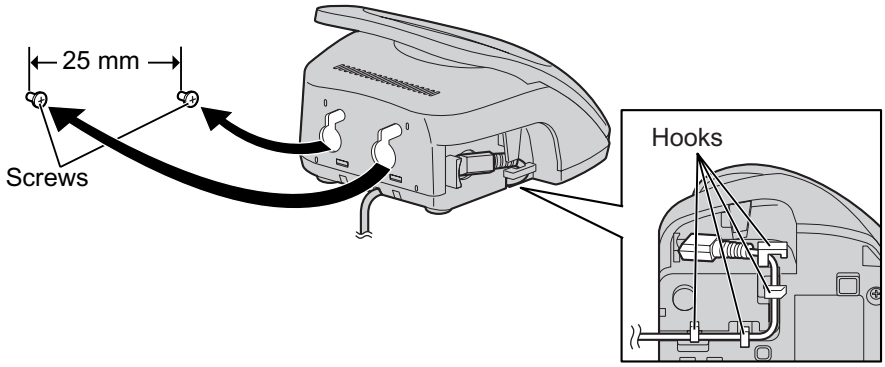

Note:

- Make sure the screws are securely fastened to the wall.
- Do not pinch the telephone line cord and AC adaptor cord between the base unit and the wall.
- Use the following wall template to position the screws before drilling.

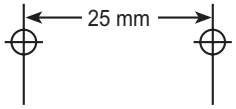

TG1810_1822AL(e-e).book Page 62 Tuesday, March 1, 2005 6:46 PM

Available character entries

Important:

- For character entry when writing SMS messages, see page 47.

The dial keys are used to enter characters and numbers. Each dial key has multiple characters assigned to it. The available character entry modes are, LetterWise, Alphabet, Numeric, Greek, Extended 1, Extended 2, and Cyrillic. When in Alphabet (ABC), Greek (ΑΒΓ), Extended 1 (AÄÅ), Extended 2 (SŚŠ), or Cyrillic (АБВ) character entry modes, you can select which character is entered by pressing a dial key repeatedly.

- When the unit displays the character entry screen:
  - Press **【◀】** or **【▶】** to move the cursor.
  - Press dial keys to enter characters and numbers.
  - Press **【C/⊠】** to erase the character or number highlighted by the cursor. Press and hold **【C/⊠】** to erase all characters or numbers.
  - Press **【✳】** to switch between uppercase and lowercase.
  - To enter another character located on the same dial key, press **【▶】** to move the cursor to the next space, then press the appropriate dial key. (This is not necessary when entering text in LetterWise mode.)

Character entry modes

Several character entry modes are available. When the unit displays the character entry screen, press **【📖】**, then select a character entry mode, and press **【▶】**. The default mode is Alphabet.

LetterWise character table (for English)

LetterWise is a simplified text entry system which suggests the most likely letter to follow the previously entered text. Text can be input faster because the number of key presses are reduced. You can change which language is used for LetterWise character entry (page 31).

- Each time you press a dial key, LetterWise will suggest a character. If the suggested character is incorrect, press **【#】** repeatedly to display the desired character.

0	1	ABC 2	DEF 3	GHI 4	JKL 5	MNO 6	PQRS 7	TUV 8	WXYZ 9
Space 0	Space # & ' ( ) ✳ , - . / 1	A B C 2 a b c 2	D E F 3 d e f 3	G H I 4 g h i 4	J K L 5 j k l 5	M N O 6 m n o 6	P Q R S 7 p q r s 7	T U V 8 t u v 8	W X Y Z 9 w x y z 9

TG1810_1822AL(e-e).book Page 63 Tuesday, March 1, 2005 6:46 PM

Alphabet character table (ABC)

0	1	ABC 2	DEF 3	GHI 4	JKL 5	MNO 6	PQRS 7	TUV 8	WXYZ 9
Space 0	Space # & ' ( ) ✱ , - . / 1	A B C 2	D E F 3	G H I 4	J K L 5	M N O 6	P Q R S 7	T U V 8	W X Y Z 9
		a b c 2	d e f 3	g h i 4	j k l 5	m n o 6	p q r s 7	t u v 8	w x y z 9

Numeric entry table (0-9)

0	1	ABC 2	DEF 3	GHI 4	JKL 5	MNO 6	PQRS 7	TUV 8	WXYZ 9
0	1	2	3	4	5	6	7	8	9

Greek character table (АВГ)

0	1	ABC 2	DEF 3	GHI 4	JKL 5	MNO 6	PQRS 7	TUV 8	WXYZ 9
Space 0	Space # & ' ( ) ✱ , - . / 1	A B Γ 2	Δ E Z 3	H Θ I 4	K Λ M 5	N Ξ O 6	Π P Σ 7	T Y Φ 8	X Ψ Ω ϑ 9

Extended 1 character table (AÄÅ)

0	1	ABC 2	DEF 3	GHI 4	JKL 5	MNO 6	PQRS 7	TUV 8	WXYZ 9
Space 0	Space # & ' ( ) ✱ , - . / 1	A À Á Â Ã Ä Å Æ B C Ç 2	D E È É Ê Ë Ẽ F 3	G Ğ H I Ì Í Î Ï Ĩ İ Ǐ 4	J K L 5	M N Ñ O Ò Ó Ô Õ Ö ø 6	P Q R S Ş ß 7	T U Ù Ú Û Ü Ũ V 8	W Ŵ X Y ŷ Z 9
		a à á â ã ä å æ b c ç 2	d e è é ê ë ẽ f 3	g ğ h i ì í î ï ĩ ı ǐ 4	j k l 5	m n ñ o ò ó ô õ ö ø 6	p q r s ş ß 7	t u ù ú û ü ũ v 8	w ŵ x y ŷ z 9

- The following are used for both uppercase and lowercase:

  ø Ş Ŵ ŷ

Useful Information

Extended 2 character table (SŚŠ)

0	1	ABC 2	DEF 3	GHI 4	JKL 5	MNO 6	PQRS 7	TUV 8	WXYZ 9
Space 0	Space # & ' ( ) ∗ , - . / 1	A Á Ä Ą B C Ć Č 2	D Ď E É Ę Ě F 3	G H I Í 4	J K L Ł Ĺ Ľ 5	M N Ń Ň O Ó Ö Ő 6	P Q R Ŕ Ř S Ś Š 7	T Ť U Ú Ü Ű ů V 8	W X Y ỳ Ý Z Ź Ż Ž 9
		a á ä ą b c ć č 2	d ď e é ę ě f 3	g h i í 4	j k l ł ĺ ľ 5	m n ń ň o ó ö ő 6	p q r ŕ ř s ś š 7	t ť u ú ü ű ů v 8	w x y ỳ ý z ź ż ž 9

- The following are used for both uppercase and lowercase:

  Ą Ć Č Ę Ł Ĺ Ľ Ń Ŕ Ś Š ů ỳ Ź Ż Ž

Cyrillic character table (АБВ)

0	1	ABC 2	DEF 3	GHI 4	JKL 5	MNO 6	PQRS 7	TUV 8	WXYZ 9
Space 0 Ґ Є І Ї Ў	Space # & ' ( ) ∗ , - . / 1	А Б В Г 2	Д Е Ж З 3	И Й К Л 4	М Н О П 5	Р С Т У 6	Ф Х Ц Ч 7	Ш Щ Ъ Ы 8	Ь Э Ю Я 9

TG1810_1822AL(e-e).book Page 65 Tuesday, March 1, 2005 6:46 PM

Troubleshooting

If you still have difficulties after following the instructions in this section, disconnect the AC adaptor and turn off the handset, then reconnect the AC adaptor and turn on the handset.

Initial settings

Problem	Cause & solution
Y is flashing.	● The handset is not registered to the base unit. Register it (page 56). ● The handset is too far from the base unit. Move closer. ● The AC adaptor is not connected. Check the connections.
The handset display is blank.	● The handset is not turned on. Turn the power on (page 15).
The handset will not turn on.	● Make sure that the batteries are installed correctly (page 14). ● Fully charge the batteries (page 14). ● Clean the charge contact and charge again (page 14).

TG1810_1822AL(e-e).book Page 66 Tuesday, March 1, 2005 6:46 PM

Telephone

Problem	Cause & solution
I cannot make or receive calls.	● The AC adaptor or telephone line cord is not connected. Check the connections. ● If you are using a splitter to connect the unit, remove the splitter and connect the unit to the wall socket directly. If the unit operates properly, check the splitter. ● Disconnect the base unit from the telephone line and connect the line to a known working telephone. If the working telephone operates properly, contact our service personnel to have the unit repaired. If the working telephone does not operate properly, contact your service provider. ● The call bar feature is turned on. Turn it off (page 31). ● You dialled a call restricted number (page 36). ● The key lock feature is turned on. Turn it off (page 18).
The unit does not ring.	● The ringer volume is turned off. Adjust the handset ringer volume (page 28) and the base unit ringer volume (page 34). ● The night mode feature is turned on. Turn it off (page 29, 34).
The batteries should be charging but the battery icon does not change.	● Clean the charge contact and charge again (page 14). ● The AC adaptor is disconnected. Plug in the AC adaptor.
A busy tone is heard when 【 】 is pressed.	● The handset is too far from the base unit. Move closer and try again. ● Another handset is on an outside call. Wait for the other user to complete the call.
Static is heard, sound cuts in and out. Interference from other electrical units.	● Locate the handset and the base unit away from other electrical appliances. ● Move closer to the base unit. ● Your unit is connected to a telephone line with ADSL service. We recommend connecting a filter (contact your ADSL service provider) to the telephone line between the base unit and the telephone line jack.
The handset stops working while being used.	● Disconnect the AC adaptor and turn off the handset. Connect the AC adaptor, turn on the handset and try again.

TG1810_1822AL(e-e).book Page 67 Tuesday, March 1, 2005 6:46 PM

Problem	Cause & solution
While storing an entry in the phonebook or assigning a one touch dial, the handset starts to ring.	● A call is being received. To answer the call, press 【↷】. Programming will be cancelled. Start again.
Pressing 【○●】 does not display/dial the last number dialled.	● The redialled number was more than 24 digits long. Redial the number manually.
The handset beeps intermittently and/or [▭] flashes.	● Fully charge the batteries (page 14).
I fully charged the batteries, but [▭] still flashes.	● Clean the charge contact and charge again (page 14). ● It is time to replace the batteries (page 15).
Caller information is not displayed.	● You must subscribe to Caller ID service. ● Your unit is connected to a telephone line with ADSL service. We recommend connecting a filter (contact your ADSL service provider) to the telephone line between the base unit and the telephone line jack. ● Caller has withheld information.
While viewing caller information, the display returns to standby mode.	● Do not pause for over 1 minute while searching.
I cannot register a handset to a base unit.	● The maximum number of base units (4) are already registered to the handset. Cancel unused base unit registrations from the handset (page 58). ● The maximum number of handsets (6) are already registered to the base unit. Cancel unused handset registrations from the base unit (page 57). ● You entered the wrong PIN number. If you forget your PIN, consult your nearest Panasonic service centre. ● Locate the handset and the base unit away from other electrical appliances.

TG1810_1822AL(e-e).book Page 68 Tuesday, March 1, 2005 6:46 PM

SMS (Short Message Service)

Problem	Cause & solution
I cannot send or receive SMS messages.	● You have not subscribed to the appropriate service. Consult your service provider. ● The SMS message centre number(s) are not stored or are incorrect. Store the correct numbers (page 41). ● You may request that your service provider block your phone number when making phone calls. In order to send messages, you need to add “1832” to the beginning of the Message Centre 1 number (page 41). Note that by doing so, your phone number will be sent along with your SMS messages. ● Message transmission was interrupted. Wait until the message has been sent before using other telephone functions. ● SMS message memory is full. Erase unnecessary message in the receive and send lists (page 43, 44). ● Your unit is connected to a telephone line with ADSL service. We recommend connecting a filter (contact your ADSL service provider) to the telephone line between the base unit and the telephone line jack.
“FD” is displayed.	● The unit could not connect to the SMS message centre. Confirm that the correct SMS message centre numbers are stored (page 41). Confirm that SMS is turned on (page 41).
“FE” is displayed.	● An error occurred while sending the message. Try again.
“E0” is displayed.	● Your phone number is permanently withheld or you have not subscribed to the appropriate service. Consult your service provider.
“✓” is not displayed after you read a message. An error code (**“FD”**, **“FE”**, or **“E0”**) is displayed.	● When an error code is displayed, “✓” will not be displayed even if you have read the message.

TG1810_1822AL(e-e).book Page 69 Tuesday, March 1, 2005 6:46 PM

Answering system (KX-TG1822 only)

Problem	Cause & solution
The other party complains that they cannot leave a message.	● The recording time is set to "**Greeting Only**". Select "**1 Minute**" or "**3 Minutes**" (page 54). ● Message memory is full. Erase unnecessary messages (page 50).
I cannot operate the answering system with the handset.	● Another handset user is using the answering system, SMS features, accessing the caller list or changing base unit settings. Wait for the other user to finish. ● A caller is leaving a message. Wait for the caller to finish. ● The handset is too far from the base unit. Move closer.
I cannot operate the answering system remotely.	● You are entering the wrong remote access code. Confirm that the correct remote code is entered. If you forget the remote access code, store a new remote access code again (page 52). ● You are pressing the dial keys too quickly. Press each key firmly. ● The answering system is turned off. Turn it on (page 53). ● You are using a pulse telephone. Try again using a touch tone phone.
While recording a greeting message or listening to messages, the unit rings and recording stops.	● A call is being received. Answer the call and try again later.

TG1810_1822AL(e-e).book Page 70 Tuesday, March 1, 2005 6:46 PM

Specifications

■ **Standard:**
GAP (Generic Access Profile)

■ **Number of channels:**
120 Duplex Channels

■ **Frequency range:**
1.88 GHz to 1.9 GHz

■ **Duplex procedure:**
TDMA (Time Division Multiple Access)

■ **Channel spacing:**
1,728 kHz

■ **Bit rate:**
1,152 kbit/s

■ **Modulation:**
GFSK (Gaussian Frequency Shift Keying)

■ **RF transmission power:**
Approx. 250 mW

■ **Voice coding (KX-TG1822 only):**
ADPCM 32 kbit/s

■ **Power source:**
220–240 V, 50 Hz

■ **Power consumption, Base unit:**
Standby: Approx. 3.5 W
Maximum: Approx. 9.2 W

■ **Power consumption, Charger (KX-TG1822 only):**
Standby: Approx. 2.3 W
Maximum: Approx. 6.8 W

■ **Operating conditions:**
5 °C–40 °C, 20 %–80 % relative air humidity (dry)

■ **Dimensions:**
Base unit: Approx. 111 mm × 121 mm × 123 mm
Charger (KX-TG1822 only): Approx. 65 mm × 85 mm × 94 mm
Handset: Approx. 148 mm × 48 mm × 32 mm

■ **Mass (weight):**
Base unit: Approx. 200 g (KX-TG1810)
Base unit: Approx. 210 g (KX-TG1822)
Charger (KX-TG1822 only): Approx. 90 g
Handset: Approx. 130 g

Note:

- Specifications are subject to change.
- The illustrations used in these operating instructions may differ slightly from the actual product.

TG1810_1822AL(e-e).book Page 71 Tuesday, March 1, 2005 6:46 PM

Index

A Alarm: *28*
Answering calls: *19*
Answering system: *49*
Listening to messages: *50*
Remote operation: *52*
Settings: *54*
Turning on/off: *49*
Audible call: *24*, *25*, *39*
Auto talk: *19*, *31*

B Base unit
Additional base units: *56*
Cancelling: *58*
PIN: *36*
Resetting: *37*
Selecting: *57*
Settings: *33*
Battery
Charge: *14*
Installation: *14*
Life: *15*
Replacement: *15*
Strength: *15*

C Call bar: *31*
Caller ID service: *38*
Call restriction: *36*
Category: *21*
Ringtones: *38*
Chain dial: *23*
Character entry: *62*
Character entry for SMS: *47*
Conference calls: *59*
Connections: *13*

D Date and time: *15*
Display
Contrast: *30*
Icons: *12*
Language: *30*
Standby mode: *30*

E Emergency numbers: *35*

H Handset
Additional handsets: *56*
Cancelling: *57*
Locator: *20*
PIN: *31*
Power on/off: *15*
Registration: *56*
Resetting: *32*
Settings: *27*

I Intercom: *58*

K Key lock: *18*
Keytones: *32*

L LetterWise: *31*, *47*, *62*

M Making calls: *17*
Missed calls: *38*
Mute: *18*

N Night mode
Base unit: *34*
Handset: *29*

O One touch dial: *22*

P Pause: *19*, *35*
Phonebook copy: *26*
Phonebooks
Handset phonebook: *21*
Shared phonebook: *24*
PIN
Base unit: *36*
Handset: *31*
Power on/off: *15*

R Recall: *19*, *35*
Recording
Audible call: *24*
Greeting message: *49*
Telephone conversations: *19*
Voice memo: *51*
Redialling: *17*
Redial list: *17*
Registration: *56*
Repeater: *58*
Ringtones: *28*

S SMS feature: *41*
Speakerphone: *17*

T Transfer calls: *59*

V Voice enhancer: *18*
Voice mail: *40*
Volume
Receiver: *17*
Ringer (Base unit): *34*
Ringer (Handset): *28*

TG1810_1822AL(e-e).book Page 72 Tuesday, March 1, 2005 6:46 PM

Speakerphone: *17*
W Wall mounting: *60*

TG1810_1822AL(e-e).book Page 73 Tuesday, March 1, 2005 6:46 PM

TG1810_1822AL(e-e).book Page 74 Tuesday, March 1, 2005 6:46 PM

TG1810_1822AL(e-e).book Page 75 Tuesday, March 1, 2005 6:46 PM

TG1810_1822AL(e-e).book Page 76 Tuesday, March 1, 2005 6:46 PM

Customer Support Centre Tel. No.: 132600 or website www.panasonic.com.au

N52

Sales Department:
Panasonic Australia Pty. Limited
Austlink Corporate Park
1 Garigal Road
Belrose
NSW 2085
AUSTRALIA

Panasonic Communications Zhuhai Co., Ltd.
3 Ping Xi 8 Lu, Nanping Keji Gongye Yuan, Zhuhai, Guangdong, China 519060

Copyright:
This material is copyrighted by Panasonic Communications Co., Ltd., and may be reproduced for internal use only. All other reproduction, in whole or in part, is prohibited without the written consent of Panasonic Communications Co., Ltd.

© 2005 Panasonic Communications Co., Ltd. All Rights Reserved.

PQQX14530ZA CC0305FD0